SL Series Documentation

Release 0.031

Magna-Power Electronics, Inc.

Oct 21, 2026

GETTING STARTED

1 Preface **1**
- 1.1 Contact Magna-Power . . . 1
- 1.2 Safety Notice . . . 1
- 1.3 Safety Symbols . . . 3
- 1.4 Limited Warranty . . . 4
- 1.5 User Manual Warranty . . . 5
- 1.6 U.S. Government Rights . . . 5
- 1.7 WEEE Directive 2002/96/EC . . . 5
- 1.8 Declaration of Conformity . . . 6
- 1.9 Document Conventions . . . 6
- 1.10 Additional Help and Feedback . . . 7

2 Product Information **9**
- 2.1 Product Introduction . . . 9
- 2.2 Features at a Glance . . . 9
- 2.3 Key Features . . . 9
- 2.4 Models . . . 11
- 2.5 Specifications . . . 14
- 2.6 Dimensional Diagrams . . . 18
- 2.7 Principle of Operation . . . 18
- 2.8 Options . . . 19
- 2.9 Accessories . . . 25

3 Installation **29**
- 3.1 Inspection . . . 29
- 3.2 Package Contents . . . 29
- 3.3 Rack Installation . . . 29
- 3.4 AC Input Connection . . . 31
- 3.5 DC Output Connection . . . 33
- 3.6 Protective Cover . . . 35
- 3.7 Remote Sense Connection . . . 35
- 3.8 Water Cooling . . . 36
- 3.9 Electrical Check . . . 40

4 Features and Functions **43**
- 4.1 Output Regulation States . . . 43
- 4.2 Commands . . . 44
- 4.3 Protection and Diagnostics . . . 46

5 Operation: Front Panel **51**

5.1 Setting Trip Points . . . 52
5.2 Configuring Set Point Source . . . 52
5.3 Configuring Functionality . . . 54
5.4 Calibration . . . 56

6 External User I/O **59**
6.1 Analog Inputs . . . 61
6.2 Analog Outputs . . . 63
6.3 Digital Inputs . . . 63
6.4 Digital Outputs . . . 66
6.5 Reference Signals and Grounds . . . 68

7 Parallel and Series **69**
7.1 Parallel . . . 69
7.2 Series . . . 70

8 Operation: Computer Programming **75**
8.1 Introduction . . . 75
8.2 RS232 Communications . . . 78
8.3 LXI TCP/IP Ethernet Communications . . . 79
8.4 RIS Panel . . . 81
8.5 IEEE-488 GPIB Communications . . . 83

9 Calibration **85**
9.1 Control Board . . . 85
9.2 Driver Board . . . 85

10 SCPI Programming **87**
10.1 SCPI Command Set . . . 87
10.2 Restricted Command Set . . . 90
10.3 CALibration Subsystem . . . 93
10.4 CONFigure Subsystem . . . 95
10.5 MEASure Subsystem . . . 97
10.6 MODulation Subsystem . . . 97
10.7 OUTPut Subsystem . . . 100
10.8 SOURce Subsystem . . . 101
10.9 STATus Subsystem . . . 104
10.10 SYSTem Subsystem . . . 109
10.11 TRIGger Subsystem . . . 114

CHAPTER

ONE

PREFACE

Thank you for choosing a Magna-Power Electronics product. This document provides user, service, and programming information for the SL Series MagnaDC programmable DC power supply. If you have any suggestions or feedback for this document, please contact Magna-Power at feedback@magna-power.com.

1.1 Contact Magna-Power

Magna-Power support can be contacted for service, technical support, or spare parts:

- By Phone: +1-908-237-2200
- By Email: support@magna-power.com

Visit magna-power.com/support for more support resources and information about contacting Magna-Power worldwide.

1.2 Safety Notice

The following general safety precautions must be observed during all phases of operation of this instrument. Failure to comply with these precautions or with specific warnings elsewhere in this manual violates safety standards of design, manufacture, and intended use of the instrument. Neither Magna-Power Electronics nor any of the associated sales organizations accept responsibility for personal injury, consequential injury, loss, or damage resulting from improper use of the equipment and accessories.

Installation and service must be performed only by qualified personnel trained to handle electrical hazards. The main and auxiliary power rectifiers are active whenever AC power is energized. To de-energize the product, open the main circuit breaker and wait a few seconds before disconnecting any plugs from the product.

When working inside the product, such as wiring the emergency stop (E-stop) or performing Magna-Power-authorized service, wait at least 15 minutes for circuits to discharge to safe levels.

Ensure that the AC power line ground is properly connected to the MagnaDC power supply chassis. Additionally, all other power grounds, including those connected to application maintenance equipment, must be grounded for both personnel and equipment safety.

This product is a Safety Class 1 instrument, provided with a protective earth terminal. The protective features of this product may be impaired if it is used in a manner not specified in the operation instructions.

Warning

Residual voltage. Lethal voltages may be present inside the MagnaDC power supply even when the AC input voltage is disconnected. Only properly trained and qualified personnel should remove covers and access the inside of the MagnaDC power supply.

During normal operation, the operator does not have access to hazardous voltages within the product's chassis. Depending on the application, high voltages hazardous to human safety may be present on the DC power terminals. Ensure that the DC power cables are properly labeled as to the safety hazards and that any inadvertent contact with hazardous voltages is eliminated.

Do not install substitute parts or perform unauthorized maintenance on the product.

These operating instructions form an integral part of the equipment and must be available to the operating personnel at all times. All the safety instructions and advice notes are to be followed.

Warning

General. Do not use this product in any manner not specified by the manufacturer. The protective features of this product may be impaired if it is used in a manner not specified in the operating instructions.

Warning

Environmental Conditions. Never use the instrument outside of the specified environmental conditions described in the Environmental Characteristics of the specifications.

Warning

Ground the Instrument. This product is provided with protective earth terminals. To minimize shock hazard, the instrument must be connected to the AC mains through a grounded power cable, with the ground wire firmly connected to an electrical ground (safety ground) at the power outlet. Any interruption of the protective (grounding) conductor or disconnection of the protective earth terminal will cause a potential shock hazard that could result in injury or death.

Warning

Before Applying Power. Verify that all safety precautions are taken. All connections must be made with the unit turned off, and must be performed by qualified personnel who are aware of the hazards involved. Improper actions can cause fatal injury as well as equipment damage. Note the instrument's external markings described under "Safety Symbols".

Warning

Do Not Operate in an Explosive Atmosphere. Do not operate the instrument in the presence of flammable gases or fumes.

Warning

Do Not Remove the Instrument Cover. Only qualified, service-trained personnel who are aware of the hazards involved should remove instrument covers. Disconnect the power cable and any external circuits before removing instrument covers.

Warning

Do Not Modify the Instrument. Do not install substitute parts or perform any unauthorized modification to the product, except with the direction of Magna-Power support personnel. Return the product to a Magna-Power authorized service center for repair.

Warning

In Case of Damage. Instruments that are not functioning correctly, appear damaged or defective should be made inoperative and secured against unintended operation until they can be repaired by qualified service personnel.

1.3 Safety Symbols

Symboles de sécurité

Direct current
Courant continu

Alternating current
Courant alternatif

Caution. Refer to documentation or notation for more information before proceeding.
Attention. Consulter la documentation ou les indications pour obtenir plus de renseignements avant de poursuivre.

Caution, risk of electric shock. Refer to documentation or notation for more information before proceeding.
Attention, risque de choc électrique. Consulter la documentation ou les indications pour obtenir plus de renseignements avant de poursuivre.

Caution, hot surface.
Attention, surface chaude.

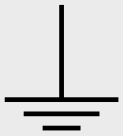

Earth ground terminal.
Borne de terre.

The ETL mark, which is a registered trademark of Intertek.
La marque ETL, marque déposée d'Intertek.

The CE marking, which shows conformity with applicable EU directives.
Le marquage CE, qui atteste la conformité aux directives de l'Union européenne applicables.

The Nemko mark, which indicates product safety certification by Nemko.
La marque Nemko, qui indique la certification de sécurité du produit par Nemko.

The Regulatory Compliance Mark (RCM), which indicates compliance with applicable Australian and New Zealand regulatory requirements.
La marque de conformité réglementaire (RCM), qui indique la conformité aux exigences réglementaires applicables de l'Australie et de la Nouvelle-Zélande.

The UKCA (UK Conformity Assessed) mark, which indicates conformity with applicable United Kingdom regulations.
La marque UKCA (UK Conformity Assessed), qui indique la conformité aux règlements applicables du Royaume-Uni.

1.4 Limited Warranty

The following is made in lieu of all warranties expressed or implied.

Magna-Power Electronics, Inc. warranties its products to be free of manufacturing defects for a period of two years from date of original shipment from its factory. Magna-Power Electronics, Inc. will repair, replace, or refund the purchase price at its discretion, which upon examination by Magna-Power Electronics, Inc., is determined to be defective in material or workmanship, providing such claimed defective material is returned upon written authorization of Magna-Power Electronics, Inc., freight and duties prepaid.

For products failing within the first 30 days of the warranty period, Magna-Power Electronics, Inc. will return the repaired product at its expense using a standard ground shipping method; after 30 days of the warranty period, the repaired product will be returned at the customer's expense using the customer's requested shipping method.

Damage due to corrosion, customer alterations, excessive dust, extreme environmental or electrical conditions, and/or misuse will be evaluated upon inspection. If inspection reveals that the cause of damage is not due to materials or workmanship, repair of the product will be treated on a non-warranty basis.

All electrical, commercial supply parts, and items not manufactured by Magna-Power Electronics, Inc. shall carry the warranty of the original manufacturer and no more, but under no circumstances to exceed the warranty period. Replacement parts shall be warranted for a period of 90 days. Warranty labor shall only apply if the product, assembly, or part is returned to the factory freight prepaid and insured. Damage or breakage while in transit is not covered by this warranty.

Magna-Power Electronics, Inc. assumes no responsibility to Buyer for labor to diagnose and remove defective product and installation of replacement product. Furthermore, Magna-Power Electronics, Inc. is not liable to Buyer or to any

third party for consequential or incidental damages under any circumstances, whether due to defect in the product, due to delay or failure of delivery, due to a failure of the product to perform as specified, or for any other reason or cause. Buyer and Magna-Power Electronics, Inc. agree that Buyer's sole remedy and Magna-Power Electronics, Inc.'s sole liability to Buyer is limited to repair, replacement, or refund of the purchase price of the product as described herein, whether Buyer's claim arises out of contract or in tort.

All claims against the warranty shall be the final determination of Magna-Power Electronics, Inc.

1.5 User Manual Warranty

The material contained in this document is provided "as is," and is subject to being changed, without notice, in future editions. Further, to the maximum extent permitted by applicable law, Magna-Power disclaims all warranties, either express or implied, with regard to this manual and any information contained herein, including but not limited to the implied warranties of merchantability and fitness for a particular purpose. Magna-Power shall not be liable for errors or for incidental or consequential damages in connection with the furnishing, use, or performance of this document or of any information contained herein. Should Magna-Power and the user have a separate written agreement with warranty terms covering the material in this document that conflict with these terms, the warranty terms in the separate agreement shall control.

1.6 U.S. Government Rights

The Software is "commercial computer software," as defined by Federal Acquisition Regulation ("FAR") 2.101. Pursuant to FAR 12.212 and 27.405-3 and Department of Defense FAR Supplement ("DFARS") 227.7202, the U.S. government acquires commercial computer software under the same terms by which the software is customarily provided to the public. Accordingly, Magna-Power provides the Software to U.S. government customers under its standard commercial license, which is embodied in its End User License Agreement (EULA). The license set forth in the EULA represents the exclusive authority by which the U.S. government may use, modify, distribute, or disclose the Software. The EULA and the license set forth therein, does not require or permit, among other things, that Magna-Power: (1) Furnish technical information related to commercial computer software or commercial computer software documentation that is not customarily provided to the public; or (2) Relinquish to, or otherwise provide, the government rights in excess of these rights customarily provided to the public to use, modify, reproduce, release, perform, display, or disclose commercial computer software or commercial computer software documentation. No additional government requirements beyond those set forth in the EULA shall apply, except to the extent that those terms, rights, or licenses are explicitly required from all providers of commercial computer software pursuant to the FAR and the DFARS and are set forth specifically in writing elsewhere in the EULA. Magna-Power shall be under no obligation to update, revise or otherwise modify the Software. With respect to any technical data as defined by FAR 2.101, pursuant to FAR 12.211 and 27.404.2 and DFARS 227.7102, the U.S. government acquires no greater than Limited Rights as defined in FAR 27.401 or DFAR 227.7103-5 (c), as applicable in any technical data

1.7 WEEE Directive 2002/96/EC

This product complies with the Waste Electrical and Electronic Equipment (WEEE) Directive 2002/96/EC marking requirement. The affixed product label (see below) indicates that you must not discard this electrical/electronic product in domestic household waste.

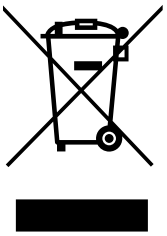

Product Category: With reference to the equipment types in the WEEE directive Annex 1, this product is classified as "Monitoring and Control instrumentation" product.

Do not dispose products in domestic household waste.

To return unwanted products, contact Magna-Power Electronics.

1.8 Declaration of Conformity

Magna-Power Electronics declares on its sole responsibility that the SL Series MagnaDC programmable DC power supply complies with the essential requirement of the relevant European Directives, and is eligible to carry the CE mark.

1.9 Document Conventions

This user's manual uses several conventions to highlight certain words and phrases and draw attention to specific pieces of information.

Note

Notes are tips, shortcuts or alternative approaches to the task at hand. Ignoring a note should have no negative consequences, but you might miss out on a time saving procedure.

Warning

The warning sign denotes a hazard, calling attention to a procedure or practice. If a warning is not correctly performed or adhered to, it could result in personal injury. Do not proceed beyond a warning sign until the conditions are fully understood or met.

Caution

The caution sign denotes a hazard, calling attention to a procedure or practice. If a caution is not correctly performed or adhered to, it could result in damage to the product. Do not proceed beyond a caution sign until the conditions are fully understood or met.

Source-code listings are also set in mono-spaced roman but add syntax highlighting as follows:

```
#!/usr/bin/python
# -*- coding: utf-8 -*-

from serial import Serial

class Magna(Serial):
def __init__(self, port, expected_serial_number=None, log=None):
        super(Magna, self).__init__(port, baudrate=19200, timeout=2.0)
        self.log = log if log else self.magna_log
        self.write('*CLS\r\n')
```

1.10 Additional Help and Feedback

For additional help or to provide feedback about the product's design and features, please contact: support@magna-power.com.

CHAPTER

TWO

PRODUCT INFORMATION

2.1 Product Introduction

This chapter introduces the technology behind the SL Series MagnaDC power supply. All MagnaDC programmable DC power supplies utilize high-frequency IGBT-based power processing in a current-fed topology, providing robust power conversion with greater tolerance to abusive loads than conventional switching power supplies. The sections that follow summarize the product's key features, present the available models and their specifications, and provide dimensional diagrams and an overview of the product's principle of operation.

2.2 Features at a Glance

The SL Series builds on over 40 years of power supply innovation at Magna-Power, designed from the ground up to meet the highly reliable power dense demands of ATE system integrators through Magna-Power's signature current-fed power processing topology. Utilizing state-of-the-art semiconductors and innovative internally designed and manufactured heat sinks, the SL Series offers industry-leading 1U (1.75" height) programmable power levels with models at 1.5 kW, 2.6 kW, 4 kW, 6 kW, 8 kW, and 10 kW while still maintaining an ambient operating temperature rating up to 50°C.

2.3 Key Features

A quick summary of the SL Series key features:

- SCPI Remote Programming API
- High Accuracy Measurements
- Master-Slave Functionality
- Remote Sensing
- 37-Pin External User I/O
- RS232 Interface
- Ethernet and GPIB Available
- 0-10V External Analog Inputs
- Programmable Protection Limits
- Fast Transient Response
- Remote Interface Software
- NI LabVIEW™ and IVI Driver
- Interlock Shutdown Input

- Designed and manufactured in the USA

2.3.1 Output Features

- **Robust Power Conversion Topology** - All MagnaDC programmable DC power supplies utilize high-frequency IGBT-based power processing in current-fed topology. This topology adds an additional stage over the conventional voltage-fed topology for enhanced control and system protection, ensuring that even under a fault condition, the power supply will self-protect. Due to the self-protecting characteristics of this topology, the possibility of fast rising current spikes and magnetic core saturation is eliminated. Every power supply is tested at 90% to 125% nominal line to ensure satisfactory operation even under the worst line voltage conditions.
- **Fast Transient Response** - Quick response to load changes, with 2 ms to recover within ±1% of regulated output with a 50% to 100% or 100% to 50% step load change.
- **Programmable Output Protection** - Programmable over voltage trip (OVT) and over current trip (OCT) allow the user to program in soft latching fault trips when the threshold is exceeded. OVT and OCT settings can be programmed from 10% to 110% of the unit's max ratings.
- **Wired Remote Sensing with Smart Detection** - A set of remote sensing terminals are provided to sense voltage at the load and compensate for voltage drop in the load cables. Compensation is provided up to 3% above the unit's max rated voltage. Wired remote sensing is available on models rated 1000 Vdc and below.
- **Leadless Remote Sensing** - Using the product's integrated modulation functionality, automatically compensate for voltage as a function of current. When the impedance between the power supply and load is known, this feature allows for remote sensing without leads, up to the max ratings of the product.

2.3.2 Programming Features

- **High Accuracy Programming and Measurement** - ± 0.075% of max rated voltage or current programming accuracy to ensure the output is following the desired programmed set point. ± 0.2% of max rated voltage or current readback accuracy ensures high accuracy measurements. A NIST traceable calibration certificate is provided at no charge with all new units.
- **Simultaneous Measurement Interfaces** - Voltage and current measurements are available simultaneously from the front panel meters, dedicated 0-10V analog output, and by computer command.
- **SCPI Remote Programming API** - Compatible with the Standard Commands for Programmable Instruments (SCPI), allowing raw ASCII text commands to control all features, functions, and configurations of the product. Commands are consistent across all available interfaces.
- **37-pin External User I/O Port** - An isolated 37-pin external user I/O port is provided, which includes a variety of analog and digital inputs and outputs. Voltage, current, over voltage and over current set points can be set by applying a 0-10V analog signal. Each diagnostic condition is given a designated pin, which reads +5V when active. Reference +5V and +10V signals are provided, eliminating the need for external voltage signals and allowing the use of dry contacts. All these pins are isolated from the output terminals and referenced to earth-ground as standard—no additional isolation equipment or options necessary.

2.3.3 System Features

- **AC Mechanical Contactor with In-rush Limiter** - An integrated mechanical contactor on the AC input circuit ensures the product is not processing power when in standby or fault. This contactor, coupled with step-start in-rush limiter circuitry, ensures no in-rush current will exceed peak input current rating of the product.
- **Designed for Safety** - Extensive diagnostic functions are provided, including: AC phase loss (not on SL Series), excessive thermal conditions, over voltage trip (programmable), over current trip (programmable), cleared fuse (not on SL/XR Series), excessive program line voltage, and interlock fault. A dedicated +5V interlock input pin and included +5V reference on all models, external emergency stop systems can be easily integrated using an external contact.

- **High-Performance Plug and Play Master-Slaving** - Power capability can easily be expanded with additional units by using the plug and play UID47 master-slaving device. In the MagnaDC master-slave scheme, the master sends gate drive signals directly to the slave units. This strategy eliminates the noise susceptibility commonly found when sending analog control references over long distances, in addition to enabling consistent performance by maintaining a single control loop.
- **Tailor Performance with Integrated Options** - A variety of configured-to-order options are available for MagnaDC programmable power supplies are designed to be flexible, depending on the application's requirements.
- **Designed and Manufactured in the USA** - For complete control of quality, MagnaDC programmable DC power supplies are designed and manufactured at Magna-Power's vertically integrated USA manufacturing facility in Flemington, New Jersey. Heat-sinks and chassis are machined from aluminum. All sheet metal is fabricated and powder coated in-house. Magnetics are wound-to-order from validated designs based on a model's voltage and current. An automated surface-mount production line places components on printed circuit boards for control, driver, auxiliary power, and display circuits. And finally after assembly, products undergo comprehensive test and NIST-traceable calibration, followed by an extended burn-in period.

2.4 Models

The following tables list the available models in the SL Series MagnaDC power supply. Ripple is specified for standard models. Ripple will be higher for models with the *High Slew Rate Output (+HS)*. Efficiency is measured at the model's maximum ratings.

2.4.1 Model Ordering Guide

The following ordering guide defines how an SL Series MagnaDC power supply is defined:

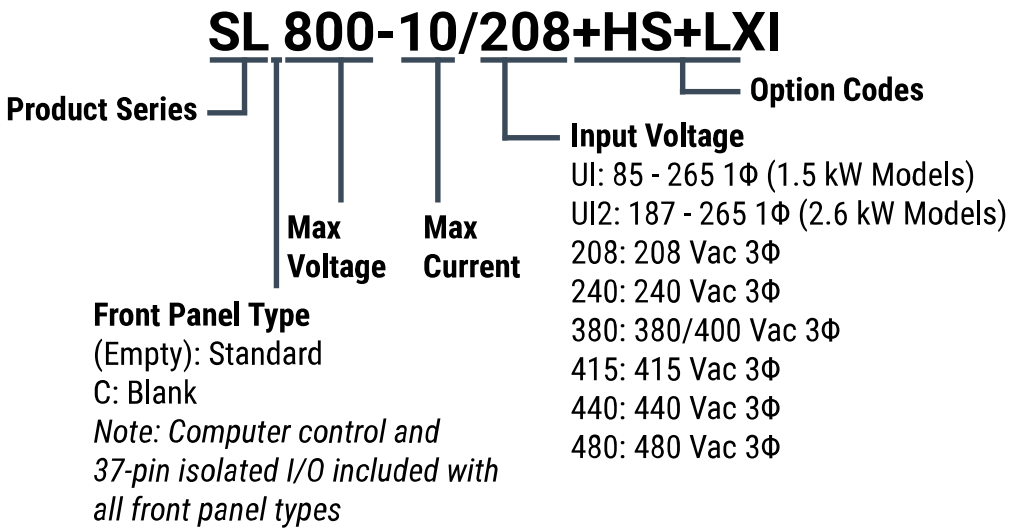

Fig. 2.1: SL Series MagnaDC power supply Model Ordering Guide

2.4.2 1.5 kW SL Series Models

Model	Maximum Voltage	Maximum Current	Ripple	Efficiency
SL5-250	5 Vdc	250 Adc	30 mVrms	84%
SL10-150	10 Vdc	150 Adc	30 mVrms	89%
SL16-93	16 Vdc	93 Adc	40 mVrms	89%
SL20-75	20 Vdc	75 Adc	40 mVrms	90%
SL25-60	25 Vdc	60 Adc	50 mVrms	91%
SL32-46	32 Vdc	46 Adc	60 mVrms	91%
SL40-37	40 Vdc	37 Adc	80 mVrms	91%
SL50-30	50 Vdc	30 Adc	70 mVrms	92%
SL60-25	60 Vdc	25 Adc	100 mVrms	93%
SL80-18	80 Vdc	18 Adc	120 mVrms	93%
SL100-15	100 Vdc	15 Adc	120 mVrms	93%
SL125-12	125 Vdc	12 Adc	110 mVrms	93%
SL160-9	160 Vdc	9 Adc	110 mVrms	93%
SL200-7.5	200 Vdc	7.5 Adc	110 mVrms	94%
SL250-6	250 Vdc	6 Adc	110 mVrms	94%
SL300-5	300 Vdc	5 Adc	160 mVrms	94%
SL375-4	375 Vdc	4 Adc	160 mVrms	94%
SL400-3.7	400 Vdc	3.7 Adc	170 mVrms	95%
SL500-3	500 Vdc	3 Adc	250 mVrms	95%
SL600-2.5	600 Vdc	2.5 Adc	250 mVrms	95%
SL800-1.8	800 Vdc	1.8 Adc	350 mVrms	95%
SL1000-1.5	1000 Vdc	1.5 Adc	400 mVrms	95%
SL1250-1.2	1250 Vdc	1.2 Adc	700 mVrms	95%
SL1500-1	1500 Vdc	1 Adc	1000 mVrms	95%

2.4.3 2.6 kW SL Series Models

Model	Maximum Voltage	Maximum Current	Ripple	Efficiency
SL10-250	10 Vdc	250 Adc	30 mVrms	89%
SL16-162	16 Vdc	162 Adc	40 mVrms	89%
SL20-130	20 Vdc	130 Adc	40 mVrms	90%
SL25-104	25 Vdc	104 Adc	50 mVrms	91%
SL32-81	32 Vdc	81 Adc	60 mVrms	91%
SL40-65	40 Vdc	65 Adc	80 mVrms	91%
SL50-52	50 Vdc	52 Adc	70 mVrms	92%
SL60-43	60 Vdc	43 Adc	100 mVrms	93%
SL80-32	80 Vdc	32 Adc	120 mVrms	93%
SL100-26	100 Vdc	26 Adc	120 mVrms	93%
SL125-20	125 Vdc	20 Adc	110 mVrms	93%
SL160-16	160 Vdc	16 Adc	110 mVrms	93%
SL200-13	200 Vdc	13 Adc	110 mVrms	94%
SL250-10.4	250 Vdc	10.4 Adc	110 mVrms	94%
SL300-8.6	300 Vdc	8.6 Adc	160 mVrms	94%
SL375-6.9	375 Vdc	6.9 Adc	160 mVrms	94%
SL400-6.5	400 Vdc	6.5 Adc	170 mVrms	95%
SL500-5.2	500 Vdc	5.2 Adc	250 mVrms	95%
SL600-4.3	600 Vdc	4.3 Adc	250 mVrms	95%
SL800-3.2	800 Vdc	3.2 Adc	350 mVrms	95%
SL1000-2.6	1000 Vdc	2.6 Adc	400 mVrms	95%
SL1250-2	1250 Vdc	2 Adc	700 mVrms	95%
SL1500-1.7	1500 Vdc	1.7 Adc	1000 mVrms	95%

2.4.4 4 kW SL Series Models

Model	Maximum Voltage	Maximum Current	Ripple	Efficiency
SL16-250	16 Vdc	250 Adc	40 mVrms	89%
SL20-200	20 Vdc	200 Adc	40 mVrms	90%
SL25-160	25 Vdc	160 Adc	50 mVrms	91%
SL32-125	32 Vdc	125 Adc	60 mVrms	91%
SL40-100	40 Vdc	100 Adc	80 mVrms	91%
SL50-80	50 Vdc	80 Adc	70 mVrms	92%
SL60-66	60 Vdc	66 Adc	100 mVrms	93%
SL80-50	80 Vdc	50 Adc	120 mVrms	93%
SL100-40	100 Vdc	40 Adc	120 mVrms	93%
SL125-32	125 Vdc	32 Adc	110 mVrms	93%
SL160-25	160 Vdc	25 Adc	110 mVrms	93%
SL200-20	200 Vdc	20 Adc	110 mVrms	94%
SL250-16	250 Vdc	16 Adc	110 mVrms	94%
SL300-13.2	300 Vdc	13.2 Adc	160 mVrms	94%
SL375-10.4	375 Vdc	10.4 Adc	160 mVrms	94%
SL400-10	400 Vdc	10 Adc	170 mVrms	95%
SL500-8	500 Vdc	8 Adc	250 mVrms	95%
SL600-6.4	600 Vdc	6.4 Adc	250 mVrms	95%
SL800-5	800 Vdc	5 Adc	350 mVrms	95%
SL1000-4	1000 Vdc	4 Adc	400 mVrms	95%
SL1250-3.2	1250 Vdc	3.2 Adc	700 mVrms	95%
SL1500-2.6	1500 Vdc	2.6 Adc	1000 mVrms	95%

2.4.5 6 kW SL Series Models

Model	Maximum Voltage	Maximum Current	Ripple	Efficiency
SL20-250	20 Vdc	250 Adc	40 mVrms	90%
SL25-240	25 Vdc	240 Adc	50 mVrms	91%
SL32-186	32 Vdc	186 Adc	60 mVrms	91%
SL40-150	40 Vdc	150 Adc	80 mVrms	91%
SL50-120	50 Vdc	120 Adc	70 mVrms	92%
SL60-100	60 Vdc	100 Adc	100 mVrms	93%
SL80-75	80 Vdc	75 Adc	120 mVrms	93%
SL100-60	100 Vdc	60 Adc	120 mVrms	93%
SL125-48	125 Vdc	48 Adc	110 mVrms	93%
SL160-36	160 Vdc	36 Adc	110 mVrms	93%
SL200-30	200 Vdc	30 Adc	110 mVrms	94%
SL250-24	250 Vdc	24 Adc	110 mVrms	94%
SL300-20	300 Vdc	20 Adc	160 mVrms	94%
SL375-16	375 Vdc	16 Adc	160 mVrms	94%
SL400-15	400 Vdc	15 Adc	170 mVrms	95%
SL500-12	500 Vdc	12 Adc	250 mVrms	95%
SL600-10	600 Vdc	10 Adc	250 mVrms	95%
SL800-7.5	800 Vdc	7.5 Adc	350 mVrms	95%
SL1000-6	1000 Vdc	6 Adc	400 mVrms	95%
SL1250-4.8	1250 Vdc	4.8 Adc	700 mVrms	95%
SL1500-4	1500 Vdc	4 Adc	1000 mVrms	95%

2.4.6 8 kW SL Series Models

Model	Maximum Voltage	Maximum Current	Ripple	Efficiency
SL32-250	32 Vdc	250 Adc	60 mVrms	91%
SL40-200	40 Vdc	200 Adc	80 mVrms	91%
SL50-160	50 Vdc	160 Adc	70 mVrms	92%
SL60-133	60 Vdc	133 Adc	100 mVrms	93%
SL80-100	80 Vdc	100 Adc	120 mVrms	93%
SL100-80	100 Vdc	80 Adc	120 mVrms	93%
SL125-64	125 Vdc	64 Adc	110 mVrms	93%
SL160-50	160 Vdc	50 Adc	110 mVrms	93%
SL200-40	200 Vdc	40 Adc	110 mVrms	94%
SL250-32	250 Vdc	32 Adc	110 mVrms	94%
SL300-26.4	300 Vdc	26.4 Adc	160 mVrms	94%
SL375-21.3	375 Vdc	21.3 Adc	160 mVrms	94%
SL400-20	400 Vdc	20 Adc	170 mVrms	95%
SL500-16	500 Vdc	16 Adc	250 mVrms	95%
SL600-13.3	600 Vdc	13.3 Adc	250 mVrms	95%
SL800-10	800 Vdc	10 Adc	350 mVrms	95%
SL1000-8	1000 Vdc	8 Adc	400 mVrms	95%
SL1250-6.4	1250 Vdc	6.4 Adc	700 mVrms	95%
SL1500-5.3	1500 Vdc	5.3 Adc	1000 mVrms	95%

2.4.7 10 kW SL Series Models

Model	Maximum Voltage	Maximum Current	Ripple	Efficiency
SL40-250	40 Vdc	250 Adc	80 mVrms	91%
SL50-200	50 Vdc	200 Adc	70 mVrms	92%
SL60-166	60 Vdc	166 Adc	100 mVrms	93%
SL80-125	80 Vdc	125 Adc	120 mVrms	93%
SL100-100	100 Vdc	100 Adc	120 mVrms	93%
SL125-80	125 Vdc	80 Adc	110 mVrms	93%
SL160-60	160 Vdc	60 Adc	110 mVrms	93%
SL200-50	200 Vdc	50 Adc	110 mVrms	94%
SL250-40	250 Vdc	40 Adc	110 mVrms	94%
SL300-33.3	300 Vdc	33.3 Adc	160 mVrms	94%
SL375-26.5	375 Vdc	26.5 Adc	160 mVrms	94%
SL400-25	400 Vdc	25 Adc	170 mVrms	95%
SL500-20	500 Vdc	20 Adc	250 mVrms	95%
SL600-16.5	600 Vdc	16.5 Adc	250 mVrms	95%
SL800-12.5	800 Vdc	12.5 Adc	350 mVrms	95%
SL1000-10	1000 Vdc	10 Adc	400 mVrms	95%
SL1250-8	1250 Vdc	8 Adc	700 mVrms	95%
SL1500-6.6	1500 Vdc	6.6 Adc	1000 mVrms	95%

2.5 Specifications

2.5.1 AC Input Specifications

1Φ AC Input Voltage *1Φ, 2-wire + ground*	100 to 240 Vac (UI: Universal input; 1.5 kW Models) 208 to 240 Vac (UI2: Universal input; 2.6 kW Models)
3Φ AC Input Voltage *3Φ, 3-wire + ground* *Available on all models*	208 Vac (operating range 187 to 229 Vac) 240 Vac (operating range 216 to 264 Vac) 380/400 Vac (operating range 342 to 440 Vac) 415 Vac (operating range 373 to 456 Vac) 440 Vac (operating range 396 to 484 Vac) 480 Vac (operating range 432 to 528 Vac)
AC Input Current	Refer to chart of available models
AC Input Frequency	50-400 Hz
Power Factor	0.99 at max power; models with 1Φ AC input >0.82 at max power; models with 3Φ AC input
AC Input Isolation	±2500 Vdc, maximum input voltage to ground

2.5.2 Output Specifications

Voltage Ripple	Refer to chart of available models.
Line Regulation	Voltage mode: ± 0.06% of full scale Current mode: ± 0.08% of full scale
Load Regulation	Voltage mode: ± 0.01% of full scale Current mode: ± 0.04% of full scale
Load Transient Response	2 ms to recover within ±1% of regulated output with a 50% to 100% or 100% to 50% step load change
Stability	± 0.10% for 8 hrs. after 30 min. warm-up
Efficiency	84% to 95%; refer to chart of available models
DC Output Isolation	±1500 Vdc max output voltage to ground

2.5.3 Programming Specifications

Programming Accuracy	Voltage: ±0.075% of max voltage rating Current: ±0.075% of max current rating
Measurement Accuracy	Voltage: ±0.2% of max voltage rating Current: ±0.2% of max current rating

continues on next page

Table 2.3 – continued from previous page

Maximum Slew Rate *Standard Models*	170 ms, output voltage change from 0 to 63% 200 ms, output current change from 0 to 63%
Maximum Slew Rate *Models with High Slew Rate Option (+HS)*	5 ms, output voltage change from 0 to 63% 10 ms, output current change from 0 to 63%
Trip Settings Range	Over Voltage: 10% to 110% max voltage rating Over Current: 10% to 110% max current rating
Computer Command Protocol	Standard Commands for Programmable Instruments (SCPI)
Remote Sense Limits *Wired*	3% maximum voltage drop from output to load

2.5.4 Connectivity Specifications

Communication Interfaces (Standard)	RS232: DB-9, Female External User I/O: DB-37, Female
Communication Interfaces (Optional)	LXI TCP/IP Ethernet: RJ-45 GPIB: IEEE-488

2.5.5 External User I/O Specifications

Digital Inputs	5 V, 10 kΩ impedance
Digital Monitoring Signals	5 V, 5 mA capacity
Digital Reference Signal	5 V output, 25 mA capacity
Analog Programming Input	0-10 V
Analog Programming Impedance	10 kΩ
Analog Monitoring Signals	0-10 V, 5 mA capacity
Analog Monitoring Impedance	100 Ω
Analog Monitoring Accuracy	0.2% of max rating
Analog Reference Signal	10 V, 5 mA capacity, 1 Ω impedance

For more details about the External User I/O, see: *External User I/O*.

2.5.6 Physical Specifications

Power Level	Rack Units	Size	Weight
1.5 kW	1U	1.75” H x 19” W x 24” D (4.4 x 48.3 x 61.0 cm)	32 lbs (14.52 kg)
2.6 kW	1U	1.75” H x 19” W x 24” D (4.4 x 48.3 x 61.0 cm)	34 lbs (15.42 kg)
4 kW	1U	1.75” H x 19” W x 24” D (4.4 x 48.3 x 61.0 cm)	35 lbs (15.88 kg)
6 kW	1U	1.75” H x 19” W x 24” D (4.4 x 48.3 x 61.0 cm)	35 lbs (15.88 kg)
8 kW	1U	1.75” H x 19” W x 24” D (4.4 x 48.3 x 61.0 cm)	36 lbs (16.33 kg)
10 kW	1U	1.75” H x 19” W x 24” D (4.4 x 48.3 x 61.0 cm)	37 lbs (16.78 kg)

2.5.7 Environmental Specifications

Ambient Operating Temperature	-25°C to 50°C
Storage Temperature	-40°C to +85°C
Humidity	Relative humidity up to 95% non-condensing
Air Flow	Side air inlet, rear exhaust
Temperature Coefficient	0.04%/°C of maximum output voltage 0.06%/°C of maximum output current

2.5.8 Regulatory Compliance

EMC	Complies with 2014/30/EU (EMC Directive) CISPR 22 / EN 55022 Class A

continues on next page

Table 2.8 – continued from previous page

Safety	
	NRTL Listed, TÜV SÜD Certificate U8 123461 0001 Tested to UL 61010-1:2012/R:2019-07 and CSA C22.2 No. 61010:2012/A1:2018-11 Complies with EN61010-1 and 2014/35/EU (Low Voltage Directive)
CE Mark	Yes
RoHS Compliant	Yes

2.6 Dimensional Diagrams

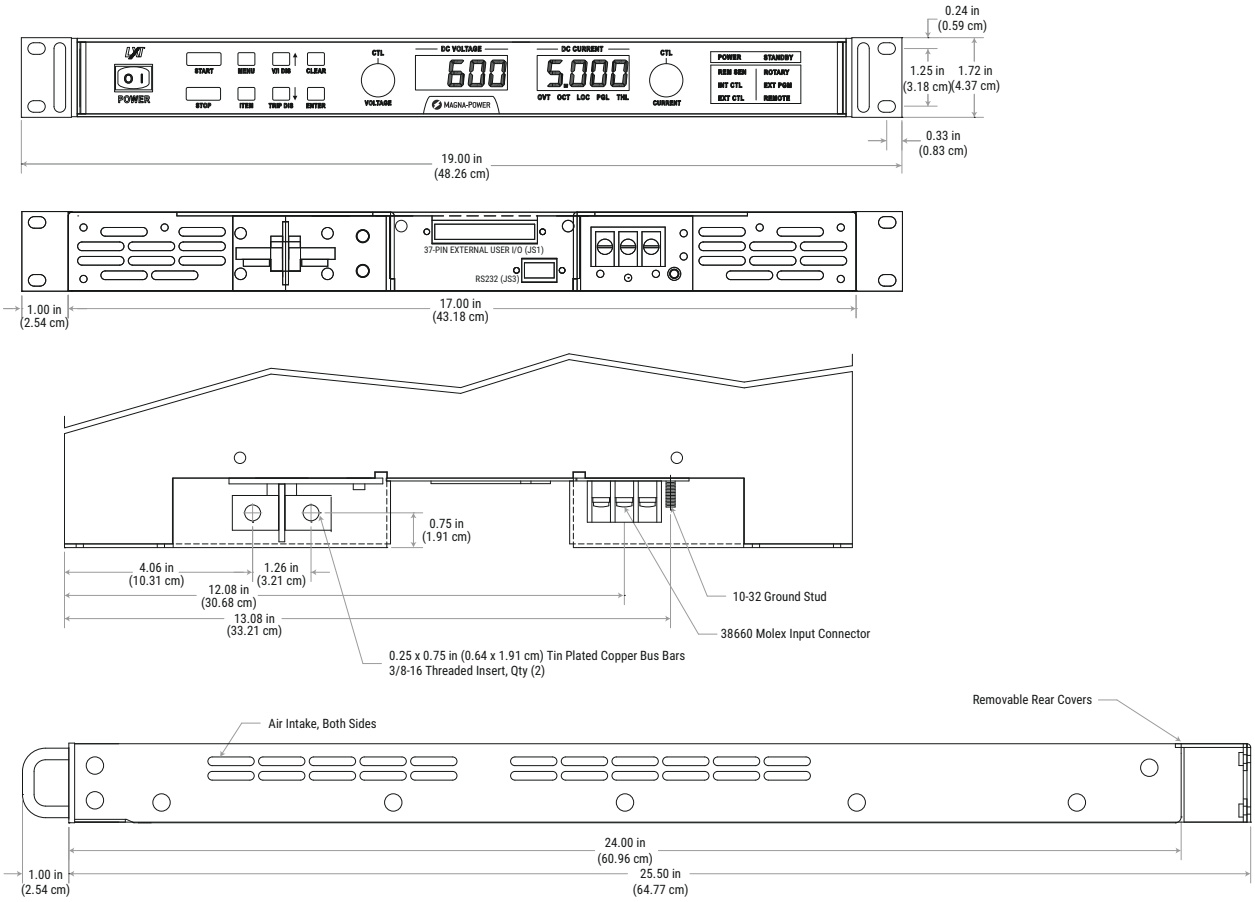

Fig. 2.2: SL Series front panel, rear panel, top rear view, and side panel, top-to-bottom

2.7 Principle of Operation

This section provides a general overview of the technology and power processing stages in a Magna-Power Electronics SL Series. Fig. 2.3 provides an visual overview of the power supply's main power and control stages.

Power is fed through AC fuses and is distributed to the auxiliary power supply, inrush limiter, and main 3Φ contactor. The auxiliary power supply operates off the AC mains, supplying power to the other printed circuit boards in the system. The inrush limiter is a step start device which is used to initially charge capacitors on the input DC bus and limit the

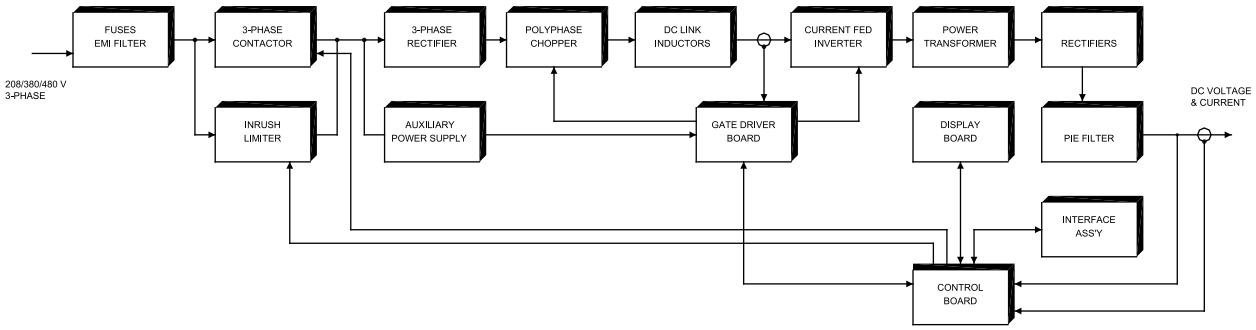

Fig. 2.3: SL Series MagnaDC power supply functional block diagram

inrush of current. The inrush limiter is initiated when the power supply is switched from a standby to a power state. After the charge cycle, the main 3Φ contactor is energized and power is allowed to flow to the load. The EMI filter reduces common mode and differential mode noise emanating from the supply.

Output power is controlled through a polyphase chopper. For the 4 kW, 6 kW, 8 kW, and 10 kW SL Series power supplies, three choppers, phased 120° apart, provide a current source to a current fed inverter. The 2.6 kW SL Series power supplies uses two choppers, phased 180° apart, and the 1.5 kW supplies uses only one chopper. The choppers are controlled with current mode, pulse width modulation (PWM).

This modulation scheme provides a quick response for transients and filtering harmonics on the DC bus. As illustrated, chopper output current is monitored for balancing and for sensing overload current conditions. The polyphase chopper has been engineered to eliminate harmonic components minimizing currents circulating in the power supply.

The polyphase chopper produces a controlled DC bus which is connected to DC link inductors and current fed, IGBT inverter. The inverter, which operates above 20 kHz, excites the main transformer at higher than normal line frequencies. This operation produces ohmic isolation between the input and output of the power supply using a transformer of dramatically reduced size.

The inverter operates with a 50% duty cycle and its frequency operation is transparent to the performance of the power supply.

The output of the main power transformer is converted to DC via rectifiers. Low voltage versions of the SL Series power supply use midpoint diode configurations and higher voltage versions use bridge configurations.

The DC output voltage is filtered with a pi section filter. This, in combination with the DC link inductors, form a double stage inductive capacitive (LC) filter.

The gate driver board supports a synchronized modulation scheme which integrates power semiconductor switching of the switching power supply, polyphase chopper, and IGBT inverter.

The phase detector senses input line voltage on each phase. Upon detection of a problem, the control board is signaled to shutdown the system. The control board, which is referenced to earth ground, contains optically isolated amplifiers to sense output voltage and current. This circuitry allows the output to be referenced ±1000 Vdc above earth ground.

The display board contains light-emitting diodes for displaying diagnostic conditions and provides an interface for meters and switches.

2.8 Options

2.8.1 Blocking Diode (+BD)

The integrated Blocking Diode (+BD) option provides an internally heat-sunk protection diode on the positive output terminal of a MagnaDC programmable DC power supply. This diode protects the product's output from reverse voltage

up to 1200 Vdc. All voltage sensing is performed after the protection diode—at the product's output terminals—making the diode's operation completely transparent to the performance of the power supply.

The +BD option is recommended for applications where there is significant back-emf or the possibility of a DC output voltage that could exceed the power supply's output voltage rating, such as:

- DC motor drives
- Battery and capacitor charging
- Large electromagnets

In these applications, the integrated blocking diode can be used to prevent back-emf from the energy stored in the load into the power supply's output. Furthermore, the integrated blocking diode will prevent the power supply's internal bleed resistance from discharging the energy stored in the load when the power supply is off or in standby.

Availability

The +BD option is available for models with maximum output voltage rating as specified for the following product series:

- TS Series, models rated from 40 Vdc to 1000 Vdc
- MT Series, models rated from 125 Vdc to 1000 Vdc
- ML Series, models rated from 250 Vdc to 1000 Vdc

> **Note**
>
> The +BD option cannot be combined with the +ISO option.

Table 2.9: Additional specifications for Blocking Diode (+BD) option

Reverse Voltage Rating	1200 Vdc
Additional Losses	Up to 1.4%

2.8.2 High Isolation Output (+ISO)

Certain applications require floating the output voltage to values beyond the power supply isolation rating. Magna-Power's High Isolation Output Option (+ISO) enables any TS/MT/ML Series model with a peak output voltage rating of 250 Vdc through 1000 Vdc to be rated for a higher voltage output isolation. Improved isolation is achieved by a novel output stage with improved controller isolation. In addition to being able to float the power supply to a higher output voltage, this option also enables lower voltage units to be tied together in series up to its new higher isolation rating, in accordance with the table below.

Availability

The +ISO option is available for models with maximum output voltage rating as specified for the following product series:

- TS Series, models rated from 250 Vdc to 1000 Vdc
- MT Series, models rated from 250 Vdc to 1000 Vdc
- ML Series, models rated from 250 Vdc to 1000 Vdc

> **Note**
>
> The +ISO option cannot be combined with the +BD option. On TS Series models it also cannot be combined with the *Water Cooling (+WC)* option. That restriction does not apply to the ML Series, whose water cooling is standard and uses a different cooling design.

> **Note**
>
> Addition of the +ISO option will cause the product's wired remote sense feature to be removed.

Table 2.10: Option isolation rating for various configurations

Product Series	Output Isolation Standard, No Option	Output Isolation for Models Rated 250-1000 Vdc With +ISO Option	Output Isolation for Models Rated Above 1000 Vdc; Standard, No Option Necessary
SL Series	±1500 Vdc	N/A	N/A
XR Series	±1500 Vdc	N/A	±(1500 Vdc + Vo/2)
TS Series	±1000 Vdc	±(3000 Vdc + Vo/2)	±(3000 Vdc + Vo/2)
MT Series	±1000 Vdc	±6000 Vdc	±6000 Vdc

2.8.3 High Slew Rate Output (+HS)

The High Slew Rate Output (+HS) solves several limitations inherent in switching power supply design. Rapid voltage transitions require internal electronics to supply the energy to charge and discharge output capacitors. Peak currents internal to the power supply define slew rate; utilizing less capacitance enables voltage transitions in shorter time periods. Additionally, less capacitance reduces requirements for discharge demands during open circuit conditions.

The standard output stage Magna-Power Electronics power supplies has been designed to provide the lowest possible output ripple voltage within the constraints of available components, size, and cost. Part of the output stage consists of a bank of aluminum electrolytic capacitors which has the desired electrical properties to provide this function. These components require bleed resistors to discharge any voltage when the power supply has no load and is disabled. While the presence of these components and the resulting performance are normally industry accepted, there are applications where lower output capacitance and lower loss bleed resistors are extremely desirable and higher ripple voltage is acceptable. To meet this need, a high-slew rate option is available which has an output stage consisting of low capacitance film and aluminum electrolytic capacitors and lower loss bleed resistors. Applications for the high-slew rate option include battery charging, photovoltaic emulation, power waveform generation, and medium speed power pulsing. These applications all benefit from higher bandwidth and in many cases, can tolerate increased ripple voltage.

Key Applications

For battery charger applications, output capacitance and internal bleed resistors present themselves as a load to the connecting batteries. One common practice is to use a series diode to block reverse current flow with the sacrifice of increased cost and lower efficiency. The high slew rate option, with its lower output capacitance and lower loss bleed resistors, enables direct connection to batteries without series blocking diodes.

For photovoltaic emulation applications, higher bandwidth and lower output capacitance enable improved performance with higher speed, maximum power tracker algorithms. Maximum power tracker circuitry deviates the operating point of photovoltaic arrays to determine maximum power output. Slow responding emulation sources can present a problem when the speed of the algorithm exceeds that of the source. Furthermore, with lower output capacitance, changes in the operating point and transients, caused by shorting the solar inverter input, produce lower unwanted input currents.

The high-slew rate option enables the power supply to operate as a low frequency, power pulse generator. With the special capacitors selected for this option, it is possible to superimpose waveforms or produce a medium speed pulse on top of the dc output and expect normal capacitor life. It is important to note that the power supply output is single quadrant; that is, the output voltage or current cannot reverse.

Availability

The +HS option is available for the following product series:

- SL Series
- XR Series
- TS Series
- MT Series
- ML Series

Note

XR Series models rated above 3000 Vdc already include a high slew rate output stage and no additional +HS option is available for these models.

Table 2.11: Additional specifications for High Slew Rate Output (+HS) option

Max Voltage Rating	Output Capacitance SL Series (µF)	Output Capacitance XR Series (µF)	Output Capacitance TS Series (µF)[1]	Ripple (Vrms)
5	4235	13200	13200	0.5
8	*N/A*	*N/A*	9000	0.5
10	1740	4080	9000	0.5
16	1740	4080	4080	0.5
20	775	2340	2340	0.7
25	775	1170	2340	0.7
32	775	1170	1170	1.4
40	760	240	1170	1.5
50	760	240	1170	1.5
60	760	240	300	1.5
80	110	240	300	1.5
100	110	160	200	1.6
125	70	160	200	1.6
160	70	160	200	1.6
200	70	160	200	1.6
250	70	160	200	1.6
300	70	160	200	1.8
375	70	160	200	1.8
400	70	160	200	1.8
500	40	56	200	2.1
600	40	56	120	2.3
800	30	52	70	2.5
1000	30	52	60	3.0
1250	*N/A*	18	18	3.5
1500	*N/A*	18	18	3.5
2000	*N/A*	18	18	3.5
3000	*N/A*	*N/A*	9	4.0
4000	*N/A*	*N/A*	9	4.0
6000-10000	*N/A*	*N/A*	*N/A*	*N/A*

[1] For 20 to 30 kW models, multiply capacitance by 2; 45 kW models, multiply capacitance by 3; 60 kW models, multiply capacitance by 4; 75 kW models, multiply capacitance by 5; TS Series 4U/8U models and MT Series models, please contact Magna-Power support.

2.8.4 IEEE-488 GPIB (+GPIB)

The IEEE-488 GPIB (+GPIB) option, sometimes called the General Purpose Interface Bus (GPIB), is a general purpose digital interface system that can be used to transfer data between two or more devices. It is particularly well-suited for interconnecting computers and instruments. Some of its key features are:

- Up to 15 devices may be connected to one bus
- Total bus length may be up to 20 m and the distance between devices may be up to 2 m
- Communication is digital and messages are sent one byte (8 bits) at a time
- Message transactions are hardware handshaked
- Data rates may be up to 1 Mbyte/sec

The IEEE-488 GPIB interface in integrated with the power supply's rear communication ports. The IEEE 488 interface offers full compatibility with Magna-Power provided drivers, software and SCPI command set.

Availability

The +GPIB option is available for the following product series:

- SL Series
- XR Series
- TS Series
- MT Series
- ML Series

2.8.5 LXI TCP/IP Ethernet (+LXI)

Certified to the LXI Standard (Class C), version 1.4, the LXI TCP/IP Etherent (+LXI) allows the product to be fully controlled over an integrated TCP/IP Ethernet interface. LXI is an instrumentation platform based on industry standard Ethernet technology designed to provide modularity, flexibility, and performance to small- and medium-sized systems. All of the product's standard SCPI commands are supported over the +LXI option, along with all provided software and drivers.

LXI's advantages are exemplified in its compact, flexible package providing high-speed I/O and reliable measurements. The Magna-Power Electronics LXI TCP/IP Ethernet option includes an embedded web-server, allowing web browser power supply control and monitoring from virtually anywhere.

Availability

The +LXI option is available for the following product series:

- SL Series
- XR Series
- TS Series
- MT Series
- ML Series

2.8.6 Pedestal Base (+PB)

Floor-standing MagnaDC power supplies are supplied as standard on locking casters, which allow the cabinet to be rolled into position and then locked in place. The Pedestal Base (+PB) option replaces those casters with a heavy-duty floor-mountable platform base, intended for permanent installations and for installations where the cabinet must be anchored to the floor.

The pedestal base raises the cabinet to the same working height as the standard casters, so cabinet dimensions, air flow, and rear panel access are unchanged. Because the base is bolted rather than rolled, it is the appropriate choice where the installation is subject to seismic anchoring requirements or where local practice prohibits equipment of this mass remaining on casters.

> **Note**
>
> The Pedestal Base option must be specified at time of order. Converting a cabinet from casters to a pedestal base in the field is not a user-serviceable operation.

Availability

The +PB option is available for the following product series:

- MT Series

2.8.7 Ruggedized (+RUG)

The Ruggedized Option (+RUG) provides additional mechanical security for large power components and sub-assemblies within SL Series and XR Series products.

SL Series and XR Series units with the Ruggedized Option have been independently tested to comply with the following MIL-STD-810G shock and vibration specifications:

- MIL-STD-810G CHG1 Method 516.7 Functional Shock, Procedure I; which subjects the product to 40G, 11 ms terminal saw tooth pulse; three shocks in each direction along three mutually perpendicular axes
- MIL-STD-810G CHG1 Method 514.7 Vibration; which subjects the product to two hours of vibration per axis along three mutually perpendicular axes

All products with the Ruggedized Option maintain ambient operating temperatures from 0°C to 50°C and ambient storage temperatures from -25°C to +85°C.

Availability

The +RUG option is available for the following product series:

- SL Series
- XR Series

2.8.8 Water Cooling (+WC)

The Water Cooling (+WC) option adapts an air-cooled Magna-Power power supply for use in densely packaged system cabinets, where heat removal by the product's standard air cooling presents a challenge. Water cooling is accomplished with chill plates and an integrated central heat exchanger. The chill plates provides a thermal conduction path for heat sensitive components and the central heat exchanger removes heat from air internal to the enclosure. An internal solenoid valve enables water flow when the chill plate reaches 60°C. Operation of the solenoid prevents internal condensation.

Each 3U and 4U module has a 1/4" NPT male inlet and outlet for water flow. For 6U and 8U, external plumbing interconnects power supply modules, providing a single 1/2" NPT male inlet and outlet. A minimum of 2.50" is recommended behind the enclosure for this hardware and user connections. For systems requiring more than one power supply, plumbing connections must be paralleled; that is, water should not flow from one power supply into another.

When water cooled power supplies are ordered in combination with the Cabinet and Integration accessory, Magna-Power will parallel the water inlet connections and parallel the water outlet connections, providing a single inlet and outlet for the rack.

Availability

The +WC option is available for models with maximum output voltage rating as specified for the following product series:

- TS Series, models rated from 1000 Vdc and below

Note

The +WC option cannot be combined with the +ISO option.

Note

The +WC option does not apply to the ML Series. ML Series power supplies are water cooled as standard, using a different cooling design from the one described above; water cooling can neither be added to nor omitted from an ML Series order.

For detailed specifications on the +WC, including flow rate and pressure, please refer to the individual product specifications. General guidance on coolant quality, the solenoid bypass, and maintenance of the water path is given in the Water Cooling section of the Installation chapter.

2.9 Accessories

2.9.1 Cabinet and Integration

Cabinet and integration services are offered for the rack-mount programmable DC power supply products. Cabinets are supplied with fans rated to installed products. Key features of the cabinet and integration option are as follows:

- Internally fabricated, heavy duty welded cabinet frames
- Casters installed, including (2) locking casters
- Special circuitry for product integration with cabinet fans
- Installation and testing as a complete system

Table 2.12: Specifications for Cabinet and Integration

Model	Internal Rack Space	Dimensions
CAB-A1, CAB-B1, CAB-C1	12U	31.5” H x 24” W x 31.5” D (80.0 x 61.0 x 80.0 cm)
CAB-A2, CAB-B2, CAB-C2	24U	51” H x 24” W x 31.5” D (129.5 x 61.0 x 80.0 cm)
CAB-A3, CAB-B3, CAB-C3	30U	67” H x 24” W x 31.5” D (170.2 x 61.0 x 80.0 cm)
CAB-A4, CAB-B4, CAB-C4	36U	74” H x 24” W x 31.5” D (188.0 x 61.0 x 80.0 cm)

continues on next page

Table 2.12 – continued from previous page

Model	Internal Rack Space	Dimensions
CAB-A5, CAB-B5, CAB-C5	60U (30Ux2)	67” H x 48” W x 31.5” D (170.2 x 121.9 x 80.0 cm)
CAB-A6, CAB-B6, CAB-C6	72U (36Ux2)	74” H x 48” W x 31.5” D (188.0 x 121.9 x 80.0 cm)
CAB-A7, CAB-B7, CAB-C7	90U (30Ux3)	67” H x 72” W x 31.5” D (170.2 x 182.9 x 80.0 cm)
CAB-A8, CAB-B8, CAB-C8	108U (36Ux3)	74” H x 72” W x 31.5” D (188.0 x 182.9 x 80.0 cm)
CAB-A9, CAB-B9, CAB-C9	42U	79.5” H x 24” W x 31.5” D (201.9 x 61.0 x 80.0 cm)

2.9.2 DC Power Cables

Utilizing Magna-Power’s internal cable manufacturing operations, custom-made DC power cables are offered as an accessory. The following table identifies the various cables and voltage ratings that are offered:

Table 2.13: Specifications for Magna-Power DC power cables

Cable Gauge (AWG)	Voltage Rating (Vdc)	Per Cable Ampacity Rating (90°C)
10	15000	55
4	600	100
4	4000	100
1	600	160
1	4000	160
2/0	600	223
2/0	4000	223
4/0	600	310
4/0	4000	310

Use the following cable configuration guide and the table above to define the appropriate cable for your application and product:

CBL-[Feet]-[Cable Gauge]-[Voltage Rating]-[Termination 1]-[Termination 2]

For example: *CBL-10-4/0-600-3/8-3/8*; 10-feet, 4/0 cable rated for 600 Vdc terminated with 3/8” lugs on both ends.

Refer to the product diagrams for the respective product series for the DC output bus thread size and number of connection points.

2.9.3 Universal Interface Device (UID47)

Magna-Power Electronics UID47 is a general purpose device for connection to Magna-Power Electronics' power supplies. The device contains the necessary circuitry for configuring power supplies for master/slave parallel or series operation.

Master/slave parallel operation allows two or more power supplies to equally share output current when connected together. Master/slave series operation allows two or more power supplies to equally share output voltage when connected together. In either operation mode, the master unit will command the slave units to the proper voltage and current. Each unit will display its own individual voltage and current. Installation requires setting jumpers, placing included 37-conductor cables between the UID47 and power supplies, and wiring the power supply outputs in either parallel or series.

The UID47 can be used as an interface for connecting control and monitoring lines to external circuitry. It also contains an area on the printed circuit board for interconnecting wires and placing components for specific user applications.

Key features of the UID47 option are as follows:

- Compatible with all Magna-Power Electronics power supplies
- Interface for series and parallel master/slave operation
- User configurable screw terminal connector
- Pad area for custom circuitry
- Qty (2) 6-foot 37-pin shielded cables included

Table 2.14: Specifications for Universal Interface Device 47 (UID47)

Connectors	Master 1: DB-37, Female Master 2: DB-37, Female Slave: DB-37, Female User Interface Circuitry: 10-pin plug connector
Ambient Operating Temperature	-25°C to +50°C
Storage Temperature	-40°C to +85°C
Size	1.24" H x 7.14" W x 4.01" D (3.15 x 18.14 x 10.19 cm)
Weight	0.5 lbs (0.23 kg)

For more detailed information about the UID47, refer to its User Manual.

2.9.4 RS485 (Converter)

The industrial RS232 to Addressable RS485 Converter allows non-addressable, "dumb" RS-232 devices to be connected on an addressable RS-485 network. The master node controls all communications to connected devices. By distributing the switching intelligence along the RS-485 network, wiring cost savings are substantial compared to a single switched "star" configuration.

Devices can either be polled by the master node or request access to the bus through a RS-232 handshake line. This provides a versatile system for interconnecting devices that are designed for point to point communications. Because the units communicate using standard RS-485 signals, RS-232 devices can form their own network or be added to an existing system. Up to 32 nodes at up to 4000 feet can be on one bus without a repeater, and the 485DSS's addressing scheme allows up to 256 units on a single network with repeaters.

2.9.5 USB (Converter)

The industrial RS232 to USB Converter offers instant I/O expansion for peripheral device connectivity. An out-of-the-box (external) alternative to PCI cards, Edgeport makes it easy to add serial port to a PC, server or thin client in minutes without opening the chassis, reconfiguring or rebooting the system.

The USB Converter device plugs directly into the back of the power supply, creating a seamless USB interface. Feature-rich design, reliability and unmatched operating system support make Edgeport USB-to-serial converters ideal for mission-critical enterprise applications. USB cable included along with associated drivers on the Magna-Power Electronics USB stick.

CHAPTER

THREE

INSTALLATION

3.1 Inspection

Carefully unpack the SL Series MagnaDC power supply and accessories saving all packing materials and included enclosures. Inspect product for possible shipping damage. Check that there are no broken knobs or connectors, the external surface is not scratched or dented, the meter faces are not damaged, and all controls move freely. Any external damage may be an indication of internal damage. If there is any damage, notify the shipping carrier and Magna-Power immediately: magna-power.com/support.

The following parts are included with all MagnaDC power supply models:

3.2 Package Contents

The following items are included with the SL Series MagnaDC power supply:

- SL Series MagnaDC power supply
- RS232 Cable (Male to Female)
- AC input metal terminal cover
- DC output metal terminal cover
- Qty (2) rear support brackets for rack installation
- Qty (16) 10-32 screws
- Qty (8) 10-32 flat washers and lock washers
- Qty (2) handles with mating hardware
- NIST traceable calibration certificate

3.3 Rack Installation

The SL Series MagnaDC power supply is intended for rack mount installations only and is designed to fit in standard 19-inch EIA equipment racks. The SL Series product is designed to fit in one rack-unit (1U). Additional support, other than that provided by the front panel, is required. Fixed rear support rails are provided, which can be adjusted at time of installation to fit a variety of equipment rack depths. These included rails are designed to mate to inserts on the SL Series side panels using included hardware. Alternatively, angle slides or cross beam supports can be used to securely fasten the product to the rack and support the rear weight. The unit should be horizontally mounted.

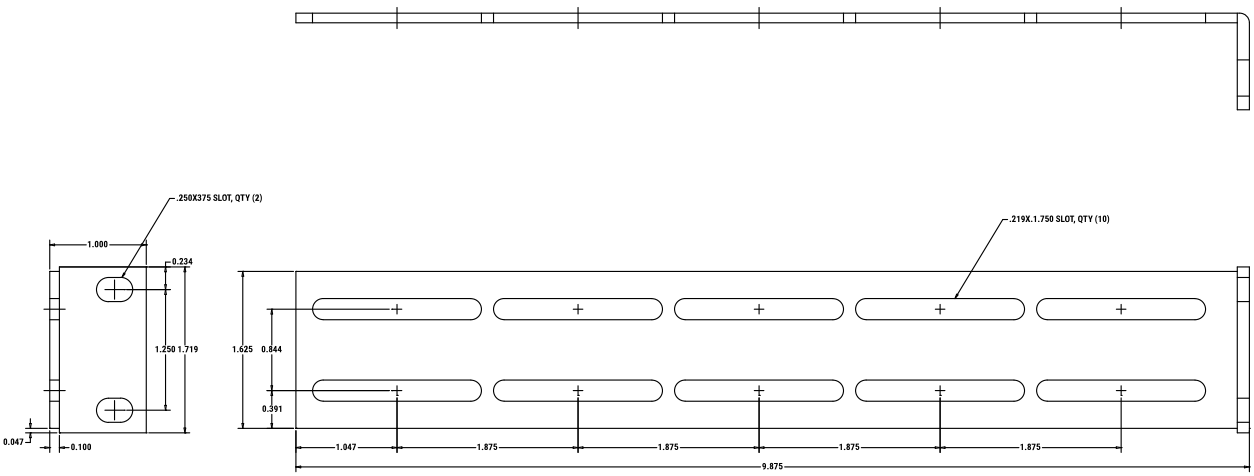

Fig. 3.1: Included rear support rails for SL Series (inches). Click for a larger view.

3.3.1 Cooling Requirements

Each SL Series MagnaDC power supply is cooled by suitable fans exhausting warm air to the rear of the cabinet. Fresh air intake is from the sides of the cabinet allowing two or more SL Series supplies to be stacked without any clearance required. Equipment racks should be equipped with fans or blowers to remove heat generated by the power supplies. Magna-Power recommends fresh air intake at the bottom of the cabinet and exhaust fans at the top pulling air out of the cabinet.

The SL Series MagnaDC power supply features integrated fans that pull in cool air from sides and exhausts warm air from the rear. Air intake from only the sides of the product allow two or more SL Series MagnaDC power supply to be stacked with zero clearance between units. Equipment racks housing the SL Series MagnaDC power supply should be equipped with either an open back, back with grills, or closed back with cabinet fans to remove heat generated by the SL Series MagnaDC power supply. For fully enclosed cabinets, Magna-Power recommends fresh air intake from the bottom of the cabinet and exhaust at the top.

For cabinet fans to be effective, the ambient intake air temperature outside the rack must be less than the air temperature inside the rack. The SL Series MagnaDC power supply is rated for 50 °C ambient operating temperature. In the case of rack installation, this corresponds to the temperature inside the rack and adequate cooling measures must be taken to ensure the rack's internal temperature stays below 50 °C.

The following table provides Magna-Power's recommended per unit cabinet air flow when installing the SL Series MagnaDC power supply in a fully enclosed cabinet:

SL Series Model Power Level	Maximum Heat Produced	Recommended Cabinet Air Flow 77 °F (25 °C) Room Temperature	Recommended Cabinet Air Flow 104 °F (40 °C) Room Temperature
1.5 kW	0.5 kBTU/hr	15 CFM	35 CFM
2.6 kW	0.9 kBTU/hr	25 CFM	65 CFM
4 kW	1.4 kBTU/hr	25 CFM	80 CFM
6 kW	2.1 kBTU/hr	50 CFM	120 CFM
8 kW	2.7 kBTU/hr	65 CFM	160 CFM
10 kW	3.4 kBTU/hr	80 CFM	200 CFM

Note

The table above accounts for only a single power supply at each respective power level. When sizing cabinet fans, it is necessary to account for the heat produced by all the products in the cabinet.

Caution

Do not block the air intake on the front or sides of the instrument, nor the exhaust at the rear of the instrument. Blocking these vents could cause the product to overheat. The recommended minimum clearances are 2 inches (5.1 cm) along the sides and back.

3.4 AC Input Connection

Warning

Disconnect AC power from the mains and measure the AC input terminals to ground to ensure 0 Vac is present before attempting any installation procedure.

AC power is wired to the SL Series MagnaDC power supply by attaching three cables plus ground for 3-phase installations or two cables plus ground for 1-phase installations. The SL Series MagnaDC power supply is phase orientation insensitive, allowing the phases to be connected in any order; the ground connection, however, must be connected to ground stud labeled with a ground *symbol*.

Magna-Power recommends cables per the recommendations of the *National Electrical Code* or *Suggested Ampacities of 4-Conductor Type S or SO Cable*, with one end stripped of 0.5 in (12.7 mm) of insulation and securely fastened to the 38660 Molex input connector at the rear of the power supply. For additional connection security, crimp the end of AC wire with a fork terminal with an outer end-to-end fork width of no more than 0.4 in (10.2 mm).

Note

The cable recommendations provided are for reference purposes only. Always consult local electrical code requirements to ensure compliance.

After connections are made, the provided protective covers for the AC input and DC output can optionally be installed and securely fastened to the chassis using three screws per cover. This programmable DC power supply is designed to be permanently connected to the power source requiring a readily accessible disconnect device incorporated into the fixed wiring.

Table 3.1: Suggested Ampacities of Various Conductors as Recommended by the National Electrical Code

Wire Size	60 °C Types	75 °C Types	85 °C Types	90 °C Types
	RUW, T, TW	FEPW, RH, RH, RUH, THW, THWN, XHHW, ZW	V, MI	TA, TBS, SA, AVB, SIS, FEP, FEPB, RHH, THHN, XHHW
14 AWG	25 Aac	30 Aac	30 Aac	35 Aac
12 AWG	30 Aac	35 Aac	40 Aac	40 Aac
10 AWG	40 Aac	50 Aac	55 Aac	55 Aac

continues on next page

Table 3.1 – continued from previous page

Wire Size	60 °C Types	75 °C Types	85 °C Types	90 °C Types
8 AWG	60 Aac	70 Aac	75 Aac	80 Aac
6 AWG	80 Aac	95 Aac	100 Aac	105 Aac
4 AWG	105 Aac	125 Aac	135 Aac	140 Aac
3 AWG	120 Aac	145 Aac	160 Aac	165 Aac
2 AWG	140 Aac	170 Aac	185 Aac	190 Aac
1 AWG	165 Aac	195 Aac	215 Aac	220 Aac
10 AWG	195 Aac	230 Aac	250 Aac	260 Aac
20 AWG	225 Aac	265 Aac	290 Aac	300 Aac
30 AWG	260 Aac	310 Aac	335 Aac	350 Aac
40 AWG	300 Aac	360 Aac	390 Aac	405 Aac
250 MCM	340 Aac	405 Aac	440 Aac	455 Aac
300 MCM	375 Aac	445 Aac	485 Aac	505 Aac
350 MCM	420 Aac	505 Aac	550 Aac	570 Aac

Table 3.2: Suggested Ampacities of 4-Conductor Type S or SO Cable

Wire Size	Maximum Current
18 AWG	7 Aac
16 AWG	10 Aac
14 AWG	15 Aac
12 AWG	20 Aac
10 AWG	25 Aac
8 AWG	35 Aac
6 AWG	45 Aac
4 AWG	60 Aac
2 AWG	80 Aac

3.4.1 Fuse Rating

MagnaDC power supplies contain a variety of power and control fuses. For MagnaDC power supply products with a 1-phase input, there are two (2) power fuses and two (2) control fuses. For MagnaDC power supply products with a 3-phase input, there are three (3) power fuses per module and two (2) control fuses per module. *The SL Series fuse table* provides the fuses ratings and recommended replacements. Magna-Power recommends using a time-delay fuse.

In the event of a fuse fault, power must be removed from the supply and the fuse must be replaced to correct this condition. A cleared power fuse usually indicates a power stage failure, often requiring factory attention. In addition, a cleared fuse can be caused by power surges from lightning storms or other AC transient events.

Warning

To avoid personal injury or damage to the SL Series MagnaDC power supply, use only the specified replacement fuses.

Table 3.3: Fuse ratings for SL Series MagnaDC power supply

Power Level	AC Input Voltage	Power Fuse Rating	Recommended Power Fuse(s)	Control Fuse Rating	Recommended Control Fuse
1.5 kW	85-265 Vac (UI) 1-Phase	Qty (2) at 25 Aac ea.	FNQ25	Qty (2) at 1 Aac ea.	FNQ1
1.5 kW	208/240 Vac 3-Phase	Qty (3) at 8 Aac ea.	FNQ8	Qty (2) at 1 Aac ea.	FNQ1
1.5 kW	380/415 Vac 3-Phase	Qty (3) at 5 Aac ea.	FNQ5	Qty (2) at 1 Aac ea.	FNQ1
1.5 kW	440/480 Vac 3-Phase	Qty (3) at 5 Aac ea.	FNQ5	Qty (2) at 1 Aac ea.	FNQ1
2.6 kW	187-265 Vac 1-Phase	Qty (2) at 25 Aac ea.	FNQ25	Qty (2) at 1 Aac ea.	FNQ1
2.6 kW	208/240 Vac 3-Phase	Qty (3) at 15 Aac ea.	FNQ15	Qty (2) at 1 Aac ea.	FNQ1
2.6 kW	380/415 Vac 3-Phase	Qty (3) at 8 Aac ea.	FNQ8	Qty (2) at 1 Aac ea.	FNQ1
2.6 kW	440/480 Vac 3-Phase	Qty (3) at 8 Aac ea.	FNQ8	Qty (2) at 1 Aac ea.	FNQ1
4 kW	208/240 Vac 3-Phase	Qty (3) at 20 Aac ea.	FNQ20	Qty (2) at 1 Aac ea.	FNQ1
4 kW	380/415 Vac 3-Phase	Qty (3) at 10 Aac ea.	FNQ10	Qty (2) at 1 Aac ea.	FNQ1
4 kW	440/480 Vac 3-Phase	Qty (3) at 10 Aac ea.	FNQ10	Qty (2) at 1 Aac ea.	FNQ1
6 kW	208/240 Vac 3-Phase	Qty (3) at 25 Aac ea.	FNQ25	Qty (2) at 1 Aac ea.	FNQ1
6 kW	380/415 Vac 3-Phase	Qty (3) at 15 Aac ea.	FNQ15	Qty (2) at 1 Aac ea.	FNQ1
6 kW	440/480 Vac 3-Phase	Qty (3) at 15 Aac ea.	FNQ15	Qty (2) at 1 Aac ea.	FNQ1
8 kW	208/240 Vac 3-Phase	Qty (3) at 35 Aac ea.	FNQ35	Qty (2) at 1 Aac ea.	FNQ1
8 kW	380/415 Vac 3-Phase	Qty (3) at 20 Aac ea.	FNQ20	Qty (2) at 1 Aac ea.	FNQ1
8 kW	440/480 Vac 3-Phase	Qty (3) at 20 Aac ea.	FNQ20	Qty (2) at 1 Aac ea.	FNQ1
10 kW	208/240 Vac 3-Phase	Qty (3) at 40 Aac ea.	ATM30/40	Qty (2) at 1 Aac ea.	FNQ1
10 kW	380/415 Vac 3-Phase	Qty (3) at 25 Aac ea.	FNQ25	Qty (2) at 1 Aac ea.	FNQ1
10 kW	440/480 Vac 3-Phase	Qty (3) at 20 Aac ea.	FNQ20	Qty (2) at 1 Aac ea.	FNQ1

3.5 DC Output Connection

Warning

SHOCK HAZARD. Turn off AC power before making any rear panel connections. Ensure that MagnaDC power supply connections, load wiring, and load connections are either insulated or covered so that no accidental contact with lethal output voltages can occur.

The DC output of the SL Series MagnaDC power supply connects to the DC bus by attaching two cables to the output bus bars. Magna-Power recommends DC power cables be crimped to ring terminals and securely fastened to bus bars using the included 3/8" bolts, washers, and lock washers. The bus bars contain 3/8"-16 threaded inserts. The recommended torque for the DC connection is 15 lb-ft (20.3 Nm).

Select a wire size sufficient to handle the maximum output current of the unit, no matter what the intended load current or current limit setting.

The recommended wire size for different current levels are shown in the table below.

Wire Size (USA)	Equivalent Wire Size (International)	Wires Per Output Terminal	Maximum Current
6 AWG	10 mm^2	1	85 Adc
4 AWG	25 mm^2	1	110 Adc
3 AWG	25 mm^2	1	130 Adc
2 AWG	35 mm^2	1	150 Adc
1 AWG	50 mm^2	1	170 Adc
1/0 AWG	50 mm^2	1	200 Adc
2/0 AWG	70 mm^2	1	235 Adc
3/0 AWG	95 mm^2	1	275 Adc
4/0 AWG	120 mm^2	1	315 Adc
1/0 AWG	50 mm^2	2	400 Adc
2/0 AWG	70 mm^2	2	470 Adc
3/0 AWG	95 mm^2	2	550 Adc
4/0 AWG	120 mm^2	2	630 Adc
1/0 AWG	50 mm^2	4	800 Adc
2/0 AWG	70 mm^2	4	940 Adc
3/0 AWG	95 mm^2	4	1100 Adc
4/0 AWG	120 mm^2	4	1260 Adc

Notes:

1. Capacity for AWG wires derived from the National Electric Code. Maximum ambient temperature: 40°C. Maximum wire temperature: 90°C. Continuous duty with wires in free air, not bundled or in conduit.
2. Capacity of aluminum wire is approximately 84% of the capacity listed for copper wire.
3. For higher current levels, it's recommended to use bus bars with holes for additional cable feeds or direct bus bar connection to the load.

Warning

FIRE HAZARD. Select a wire size large enough to carry the SL Series MagnaDC power supply model's maximum rated current to prevent overheating of the wires. Make sure power cable connections are secured tightly in accordance with the torque recommendation to prevent overheating of the bus bars.

3.5.1 Grounding the DC Output

The output of the SL Series MagnaDC power supply is floating up to the DC output isolation specifications. A floating output means the output terminals are not connected electrically to ground and the produced output voltage is from the positive terminal with respect to the negative terminal. Neither output terminal needs to be connected to ground, however if desired, either the positive or negative terminal can be connected to earth ground.

3.6 Protective Cover

The SL Series MagnaDC power supply includes a protective cover for the DC input and a second protective cover for the DC output and remote sense terminals. For oritentation and extra mechanical security, a small notch on the SL Series top panel is designed to mate with the lip on cover. Additional, there are three mating screws, detailed further below.

Before attaching the DC output cover, DC output and remote sense connections should first be made to the terminals. Open the cover's insulative feed-through by locating the larger of the two black fiberglass pieces. Loosen this black fiberglass piece by turning the screw on both sides of this piece one full turn counterclockwise.

With DC output and remote sense connections made, feed the other end (load side) of these cables through the inside of the protective cover. A small insulated circular cutout is located to the left of the black fiberglass piece, intended for the remote sense connection. The power cables should be fed between the larger black fiberglass pieces. Slide the cover back on the SL Series and mate the cover to the notch on the SL Series top panel. Align the screw holes and secure the cover using included mating hardware.

Finally, tighten the black fiberglass insulator on the cables and secure this insulator in place by tightening its screws.

The same process is repeated for the AC input covers.

3.7 Remote Sense Connection

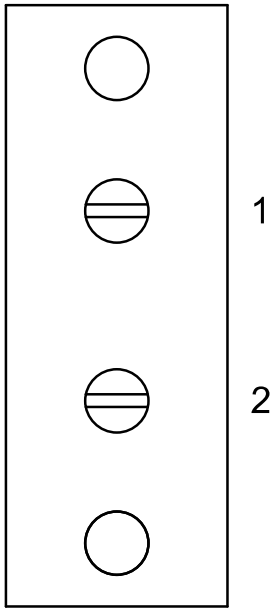

Fig. 3.2: Remote sense connector

Table 3.5: Remote Sense (JS2) Terminal Definition

Pin	Definition
1	Remote Sense Negative (-)
2	Remote Sense Positive (+)

Note

Wired remote sense is only available for models rated ≤ 1000 Vdc and without the High Isolation Output (+ISO) option.

Remote sensing can improve regulation at a remote reference point. Appreciable voltage drop can occur in the wire between the power supply and load as the current increases. By default, the load operates in local sense, where feedback is internally connected at the power supply's output terminals. However, the power supply can also operate in remote sense, and compensate for wire voltage drop by connecting its high-impedance sense wires to the load terminals. When the remote sense setting is enabled the feedback measurements are taken from the remote sense leads.

The remote sense setting is accessible from either the *front panel* configuration or by *computer command*. Magna-Power recommends using 20 AWG wires with the remote sense screw terminals. Connect the MagnaDC power supply's positive remote sense lead to the positive of the DC source terminals. Connect the MagnaDC power supply's negative remote sense lead to the negative terminal of the DC source. Both remote sense terminals are 6-32 screw connections. Connect the sense leads as close to the load as possible. Do not bundle the sense wire-pair together with the load leads; keep the load wires and sense wires separate.

Caution

Always ensure that the positive remote sense lead corresponds to the positive DC bus and, likewise, that the negative remote sense lead corresponds to the negative DC bus. Connecting sense wires with an incorrect polarity can result in equipment damage.

Enabling remote sense activates the remote sense lead detector. The remote sense lead detector checks that the remote sense leads have been connected to the load. With the power supply configured for remote sensing and upon enabling power output, the sense location is initially set to local. The sense location is switched to remote upon reaching 7.5% of full scale output voltage. Once the power supply is sensing the voltage remote, as long as the voltage detected is greater than 4.5% of full scale output voltage, the sense location remains remote; if the output voltage detected is less than 4.5%, then the sense location will automatically revert back to local.

Caution

WARNING. Switching remote sense leads or disconnecting remote sense leads while the output is enabled can cause device failure. Only switch or disconnect remote sense leads while the power supply is in standby or turned off.

The remote sense indicator on the front panel will flash when the remote sense functionality has been enabled, but the power supply is remaining in local sense. The power supply will remain in local sense with the REM SEN light flashing if the output voltage never exceeds 7.5% of full scale output voltage or the remote sense lead detector has determined sense leads are not connected. The remote sense indicator will remain flashing until the remote sense detector has detected the presence of remote sense voltage within the limits described above.

3.8 Water Cooling

Water cooling is standard on Magna-Power's ML Series DC power supplies and is available as the *Water Cooling (+WC)* option on the TS Series. In both cases, water chilled below 25°C must be supplied to the power supply's water inlet. An on-off solenoid controls the flow of water, to ensure chilled water only flows when needed, and prevents condensation buildup. Extensive temperature monitoring through thermal switches directly mounted to heatsinks ensures that power semiconductors do not overheat in the absence of water.

Magna-Power's water-cooled DC power supplies are built with copper and brass fluid paths; PEX tubing is also used in some cases where a central manifold is used to distribute water to various products or internal assemblies. Because of these metallurgies, **deionized (DI) water must not be used**—it is highly corrosive to copper and brass, leading to

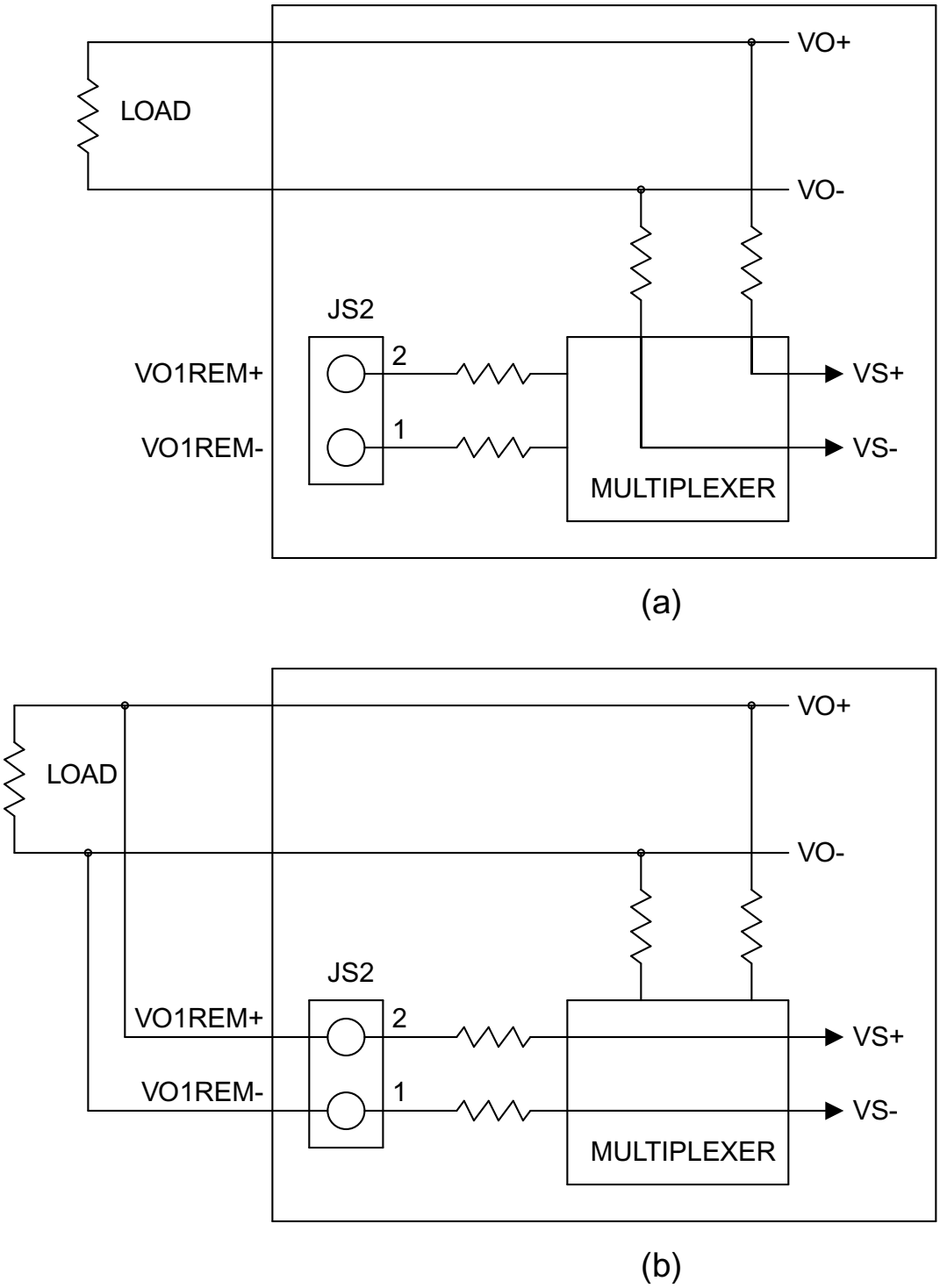

Fig. 3.3: Local Sensing (a) and Remote Sensing (b) schematic representation

premature wear and damage. Instead, follow the guidelines below to maintain water quality, ensure proper heat transfer, avoid scale buildup, and minimize corrosion or biological growth. These recommendations draw upon Magna-Power's experience for best practices in water cooling water systems.

Refer to your product's specifications for recommended maximum pressure and minimum flow rates.

3.8.1 Solenoid Bypass

Magna-Power water-cooled DC power supplies include an internal water solenoid that opens when the heatsink temperature reaches 60°C. This design limits continuous water flow in cooler environments, helping to reduce the risk of condensation inside the power supply. If condensation forms internally, it can damage components or circuitry.

A connector labeled **"Solenoid Bypass"** is provided so that this temperature-based control can be overridden. **Pin 1** is +24V and **Pin 2** is the Return. By shorting Pin 1 to Pin 2 while the power supply's control power is switched on, the user forces the solenoid open, allowing water to flow continuously—regardless of internal temperature.

The same connector reports solenoid state: **+24V present indicates that water is not flowing, and 0V indicates that water is flowing.**

The connector differs by product series, and the mating half is not provided:

Table 3.6: Solenoid bypass connectors by product series

Product Series	Connector on the Power Supply	Mating Half (not provided)
TS Series	Molex Series 1545, part number 03-09-2021 receptacle, on the rear panel	Molex Series 1545, part number 03-09-2021 plug
ML Series	Molex Micro-Fit 3.0, part number 43640-0200, 2-circuit panel-mount receptacle, behind the solenoid bypass access cover on the coolant manifold	Molex Micro-Fit 3.0, part number 43645-0200, 2-circuit housing, with part number 43030-0001 (20-24 AWG) or 43030-0038 (18 AWG) female crimp terminals

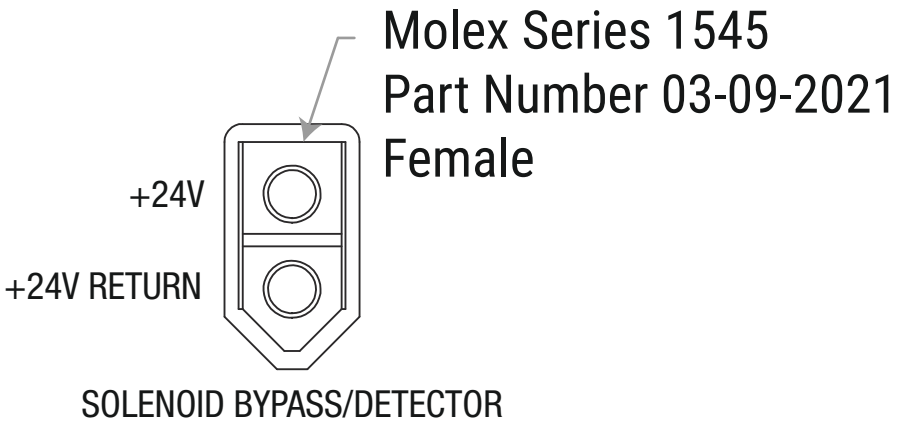

Fig. 3.4: Solenoid bypass connector on TS Series water cooled power supplies

Using the Solenoid Bypass is entirely at the user's own risk. Continuous cooling flow in low-temperature or humid conditions can cause **condensation** inside the power supply, leading to corrosion or electrical issues. Damage related to condensation or unapproved cooling practices will **not** be covered under warranty.

3.8.2 Cooling System Types

Open-loop systems typically draw water from an external source (such as municipal water, a cooling tower, or another reservoir) and then discharge it after use. Ingestion of hard water can lead to scale formation. Scale can impede water flow, coat the interior of copper/brass lines, and cause solenoid valves to seize. Air contact and continuous water makeup can introduce dissolved oxygen, minerals, and biological contaminants, increasing corrosion and biofouling risks. More frequent treatment and monitoring are needed to manage hardness, corrosion, and microbial growth.

Closed-loop systems continuously recirculate the same volume of water through the power supply's heat exchanger with minimal makeup. Although closed loops are inherently less prone to contamination from outside water, leaks or inadequate pretreatment of makeup water can still introduce hardness, contaminants, or microbes. Closed-loop systems usually operate at low dissolved oxygen levels, which helps reduce corrosion. However, stagnant areas or dead legs can harbor microbial growth. Proper filtration, corrosion inhibitors, and periodic checks are essential to maintain water quality over time.

3.8.3 Water Quality and Treatment

Softened water is generally preferred to reduce hardness. Excess hardness deposits (calcium, magnesium) are the main culprit behind scale plugging small flow paths and solenoid valves. Partially demineralized or RO-permeate blends may be acceptable if they are conditioned with the proper corrosion inhibitors and pH buffers. Avoid pure DI water; it can leach metals from copper/brass and cause severe corrosion.

Keep total hardness (as $CaCO_3$) under 10 ppm in a closed loop if possible. In open loops, continuous monitoring and chemical treatment are critical to ensure scaling does not occur.

Copper and brass components benefit from azole-based inhibitors (e.g., tolyltriazole or benzotriazole), which form a protective film on copper-based alloys. Mild steel or cast iron piping (if present) can be protected with nitrite or molybdate inhibitors. These also help buffer pH in a closed loop. Regularly test inhibitor residuals and keep them within the recommended ranges provided by your water treatment supplier.

For copper and brass, a pH range of 7.0–9.0 is typically acceptable—going too high can risk localized corrosion on brass, and going too low accelerates copper corrosion. In a closed loop, it is easier to maintain the pH setpoint; in an open loop, you may need continuous monitoring to adjust feed chemistry as water quality fluctuates.

Microbial growth (algae, bacteria, fungi) can form biofilms that impede heat transfer and foster under-deposit corrosion. Apply non-oxidizing biocides periodically (e.g., glutaraldehyde, isothiazolone) or oxidizing products for remedial action (e.g., chlorine dioxide) if microbial counts rise. Consider side-stream filtration and routine draining or flushing of stagnant segments to prevent microbial buildup.

3.8.4 Preventive Measures and Maintenance

Side-stream or in-line filtration helps remove suspended solids that cause fouling or block narrow cooling passages. Aim for 1–5 micron filtration, especially in closed loops, to capture fine particulates. Monitor pressure differential across filters—change or clean filters when differential pressure rises (e.g., 10 psi above baseline).

Schedule annual inspections of the power supply's cooling path, looking for scale or debris around solenoid valves and fittings. Clean any buildup promptly: flush the system with softened water plus a compatible cleaner, or follow your water treatment supplier's recommended cleaning and passivation procedure.

In a closed-loop system, track daily or weekly water makeup using a flow meter. Losses beyond expected drift or minor maintenance are a sign of leakage. Excessive makeup in an open loop can rapidly degrade water quality, introducing hard water and contaminants.

Periodically verify flow in all piping segments (including seldom-used branches or bypass lines). Stagnant areas promote corrosion and microbial growth. Consider rerouting or installing a bypass line to keep flow continuous through rarely used piping.

3.8.5 Pressure Monitoring

Magna-Power recommends monitoring inlet water pressure to allow operation only under adequate water supply conditions. Choose a pressure switch that provides a dry contact for a simple permissive, or a pressure transmitter (analog to a controller) if you need visibility and logic. Place the device on the supply line feeding the power supply inlet.

Integrate the signal into the power supply's *Interlock (LOC)* so the loop is closed when healthy and opens on fault. With a switch, wire its normally closed contact in series with other safety devices; with a transmitter, have the controller drive a relay that opens the interlock on fault. Commission by recording normal readings at your installation and verifying that simulated low-pressure conditions open the interlock and command a safe shutdown.

- Setpoints: Trip thresholds 10–20% above the product's minimum pressure; optional high-pressure trip at 90–95% of the product's maximum.
- Timing: 0.5–2.0 s running delay before tripping to avoid nuisance events.
- Reset: Prefer manual reset; if auto-reset is used, require 5–10 s of healthy readings before re-enable.

3.8.6 Clearing Liquid from Water Path

Before transporting the power supply, ensure that all internal water passages are cleared of residual fluid. To accomplish this, apply control power to the unit, short the *Solenoid Bypass* connector (thereby opening the solenoid), and use pressurized air (approximately 40 PSI) to blow out any remaining liquid. This precaution helps prevent water from freezing, spilling, or causing corrosion during transit.

3.8.7 Cleaning Water Path

In the event of a stuck solenoid due to buildup or after prolonged storage, Magna-Power suggests circulating a mild acidic solution to dissolve deposits. The recommended procedure is:

1. Prepare a 5-gallon container with a solution of 5% acetic acid and 95% filtered water.
2. Use a small water heater set to its highest temperature and keep the container covered to retain heat.
3. Recirculate the heated solution through the solenoid for up to 24 hours.
4. If possible, with control power applied and the solenoid bypass pins shorted, reverse the normal flow direction during the circulation period to help dislodge scale and debris.

Following this method will help restore solenoid operation by removing any accumulated deposits, minimizing downtime and the need for solenoid replacement.

3.9 Electrical Check

This section describes the electrical checkout procedure for the SL Series MagnaDC power supply. This brief electrical checkout procedure validates the product's power circuitry and safety features. This procedure should be followed upon receipt of the product and before it is placed into use.

The electrical check for models with the C Version front panel requires use of the RIS Panel software described in *Computer Programming*. With the software installed and the power supply connected to the desired communications interface, select the appropriate equivalent front panel in the Configuration Setup Panel. Select the Virtual Control Panel in the View Menu to display the virtual SL Series front panel. Follow the procedure below using the Virtual Control Panel from within the RIS Panel software.

With the power supply off, disconnect the load, set the voltage and current controls to minimum (fully counterclockwise), and set the over voltage trip and over current trip settings to maximum. Connect the power supply to a suitable source of AC voltage. For this test, only 50% of rated AC current is required. Turn the power switch on and observe the indicator lights going through the startup routine. After initialization, the following indicator lights should be on: STANDBY, INT CTL, EXT CTL, and ROTARY. This is the default configuration from the factory.

Maximum Voltage, Open-Circuit

Press the start switch and advance the current control one turn clockwise. The power and voltage control indicators should light. Increase the voltage set point to maximum and then to minimum. DC voltage should increase smoothly from minimum to maximum to minimum as indicated on the meter. Return the voltage control full counterclockwise. Press the stop switch.

Over Voltage Trip, Open-Circuit

To check over voltage trip, press the menu key. This places the power supply in data entry mode to set over voltage trip. Using the up/down arrow keys, enter an over voltage trip set point at half the rating of the power supply. Once the over voltage trip set point has been entered, press the enter key to save the information.

Press the start switch and slowly increase the voltage set point. Over voltage trip should operate at the over voltage trip set point. The over voltage trip (OVT) indicator should turn on, the power and voltage control indicators should turn off, and the supply should shut down. Press the clear key. Now set the over voltage trip set point to maximum which is 110% the full scale rating of the power supply. Again start the supply and observe that the power supply operates normally. With the main power disconnected, connect a short to the power output terminals on the rear panel. Reconnect the main power, set voltage and current controls full counterclockwise, and turn the power switch on.

Maximum Current, Short-Circuit

With the main power disconnected, connect a short across the output terminals of the power supply. Reconnect the main power, set voltage and current controls full counterclockwise and turn the power switch on.

Press the start switch and advance the voltage control one turn clockwise. Increase the current set point to maximum and then to minimum. The power and current control indicators should light. DC current should increase smoothly from minimum to maximum to minimum as indicated on the meter. Return the current control full counterclockwise. Press the stop switch.

Over Current Trip, Short-Circuit

To check over current trip, press the menu key and then the item key one time. This places the power supply in data entry mode to set over current trip. Using the up/down arrow keys, enter an over current trip set point at half the rating of the power supply. Once the over current trip set point has been entered, press the enter key to save the information.

Press the start switch and slowly increase the current set point. Over current trip should operate at the over current trip set point. The over current trip (OCT) indicator should turn on, the power and current control indicators should turn off, and the supply should shut down. Press the clear key. Now set the over current trip set point to maximum which is 110% the full scale rating of the power supply. Again start the supply and observe that the power supply operates normally.

If any of these events do not occur, the supply is defective and should not be operated. Depending on the circumstances, either warranty service or troubleshooting is required.

CHAPTER

FOUR

FEATURES AND FUNCTIONS

4.1 Output Regulation States

The SL Series MagnaDC power supply can operate in either constant voltage or constant current output regulation. The MagnaDC power supply will automatically switch between the two regulation states as a function of the programmed set points and the load impedance. The regulation state is indicated by an illuminated LED above the respective programming knob, also via the external user I/O connector or by computer command.

The SL Series MagnaDC power supply will make a seamless autocrossover from voltage mode control to current mode control, as determined by the voltage and current set points and/or load impedance. If either set point is set to zero, the other set point control will have little or no effect, forcing either a zero voltage limit or zero current limit and preventing output from the MagnaDC power supply.

4.1.1 Constant Voltage

When the constant voltage regulation state is indicated, the MagnaDC power supply is maintaining fixed voltage at the programmed set point, while the output current fluctuates as a function of the load impedance, as illustrated by Fig. 4.1.

To force the SL Series MagnaDC power supply to constant voltage mode, begin with the product in standby and set both voltage and current set points to zero. While pressing the V/I DIS key on the front panel, advance the voltage and current set points for the desired output voltage and the desired crossover current. The crossover current is the maximum desired current, at which the power supply crosses over to current mode control to become a constant current source.

Connect the load and command the power supply to start. The output voltage should be close to the voltage set point. If a load change causes the programmed current set point to be exceeded, the power supply will automatically crossover to constant current output at the programmed current set point and the output voltage will drop proportionately. When setting the current limit, allowance must be made for high peak currents which can cause unwanted crossover.

4.1.2 Constant Current

When the constant current regulation state is indicated, the MagnaDC power supply is maintaining fixed current at the programmed set point, while the output voltage fluctuates as a function of the load impedance, as illustrated by Fig. 4.2.

To force the SL Series MagnaDC power supply to constant current mode, begin with the product in standby and set both voltage and current set points to zero. While pressing the V/I DIS key on the front panel, advance the voltage and current set points for the desired output current and the desired crossover voltage. The crossover voltage is the maximum desired voltage, at which the power supply crosses over to voltage mode control to become a constant voltage source.

Connect the load and command the power supply to start. The output current should be close to the current set point. If a load change causes the programmed voltage set point to be exceeded, the power supply will automatically crossover to constant voltage output at the programmed voltage set point and the output current will drop proportionately.

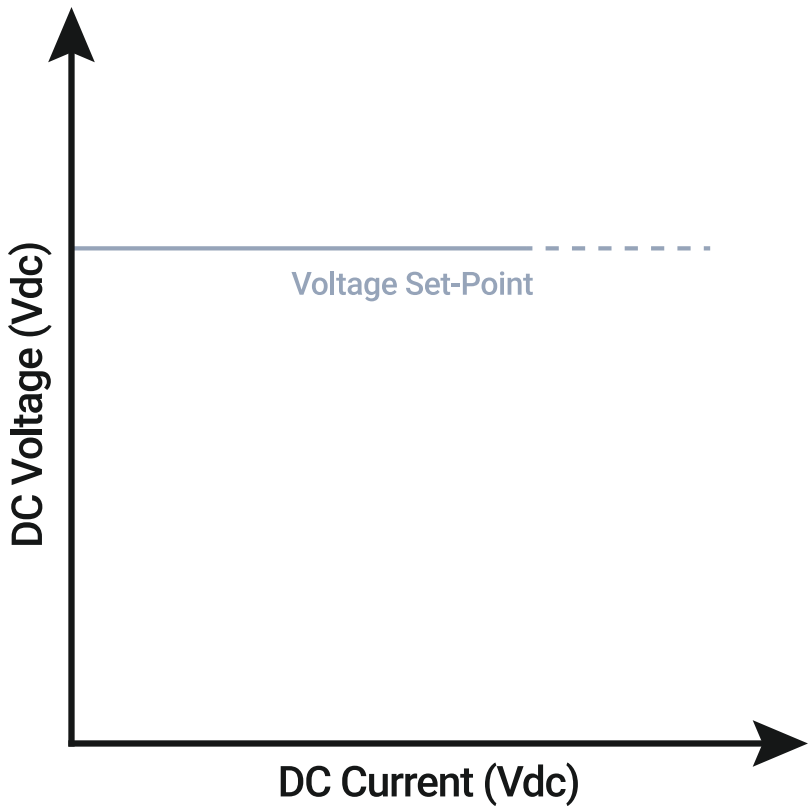

Fig. 4.1: Operating range in constant voltage mode

4.1.3 Pulse Loading

The SL Series MagnaDC power supply will crossover automatically in response to output current or output voltage exceeding the programmed set point. With the set points programmed at average values, high peak loads — as encountered in pulse loading — may cause unwanted crossover. When pulse loading, the set points should be programmed for the peak requirement, not the average.

There are internal capacitors across the output terminals of the MagnaDC power supply. These capacitors help to supply high-current, short-duration pulses during constant voltage operation. Adding external capacitance across the load improves pulse loading capability further, but reduces the protection provided by the constant current circuit; a high-current pulse may damage load components before the average current rises enough to cause the constant current circuit to respond.

4.2 Commands

The following commands allow the user to control when the SL Series MagnaDC power supply's power processing circuitry is engaged and when faults are cleared. These commands are available from the front panel, external user I/O and computer commands. To control which interfaces these commands are available from, the user can control these settings with the following configuration settings:

- **INT CTL**: Front panel control for Start, Stop, and Clear.
- **EXT CTL**: External user I/O and computer control for Start, Stop, and Clear.

INT CTL and EXT CTL can both be enabled simultaneously, if desired, for Start, Stop, and Clear control from a variety of interfaces.

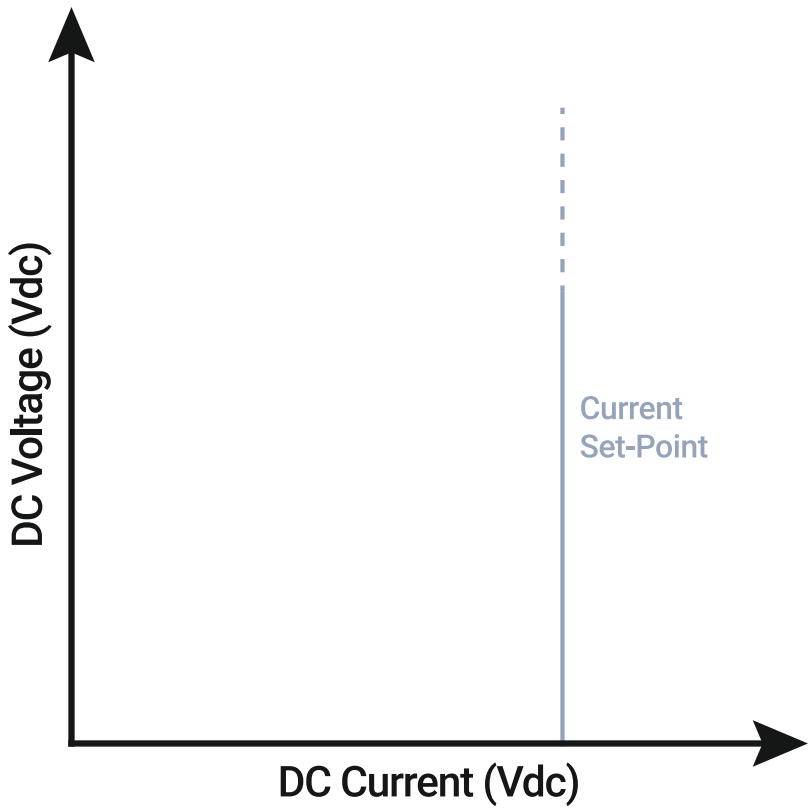

Fig. 4.2: Operating range in constant current mode

Caution

Only disable INT CTL if verified external or computer controls are in place, as it will prevent the user from stopping the product from the front panel.

4.2.1 Start

The Start command engages the power processing circuitry, signaled by a click of the product's AC input contactor engaging, placing the product in a powered state. The Start command can only be issued when the product is in standby. If the product is either in an alarm state or in a power state, the Start command will have no effect.

After issuing the Start command, the product enters in a soft start, which is a pre-charge circuit used to prevent in-rush current.

Note

For applications demanding fast and/or high repetition cycle times off and on, once in a powered state, it's recommended to program the product to zero and then back up to the desired set point, instead of using Stop/Start commands. Programming the product down to zero and then back up to the set point eliminates soft start circuitry delay and provides the fastest achievable rise time.

For more information on the Start command:

- *Commanding Start from the front panel*

- *Commanding Start from external user I/O*
- *Commanding Start from computer command*

4.2.2 Stop

The Stop command disengages the power processing circuitry, signaled by a click of the product's AC input contactor disengaging, placing the product in a standby state. The Stop command can only be issued when the product is in a powered state. If the product is either in an alarm state or in standby state, the Stop command will have no effect.

For safety, the Stop command always takes precedence over any other active command, regardless of the interface. If a Start command is issued while the Stop command is active, the product will not engage.

For more information on the Stop command:

- *Commanding Stop from the front panel*
- *Commanding Stop from external user I/O*
- *Commanding Stop from computer command*

4.2.3 Clear

The Clear command unlatches a fault from memory and transitions the front from an alarm state to standby state. After a fault has occurred, the Clear command must be issued before the product is able to resume operation. Alternatively, the product can be power cycled. The Clear command will only unlatch a fault from memory if the fault condition has been resolved.

For more information on the Clear command:

- *Commanding Clear from the front panel*
- *Commanding Clear from external user I/O*
- *Commanding Clear from computer command*

4.3 Protection and Diagnostics

4.3.1 Over Voltage Trip (OVT)

The SL Series MagnaDC power supply has a programmable Over Voltage Trip setting used to shutdown the product if an undesired maximum voltage value is measured across the DC output. The OVT setting can be adjusted to a maximum of 110% of the specific MagnaDC power supply's full scale voltage rating. An over-voltage condition must be sustained for ~ 30 ms for the OVT fault to register.

When an OVT fault occurs, a contactor on the AC input opens, providing a mechanical break to the power processing circuits, but leaving the control power in place. An OVT alarm is indicated by red OVT LED illumination on the front panel, +5V on Pin 34 of the external user I/O and by computer command by querying the Questionable Register. To resume operation, the DC output voltage must drop below the MagnaDC power supply's OVT setting, the *Clear* function must be issued, and the input re-energized with the *Start* function.

The OVT setting can be programmed through the front panel, through 0-10V analog input on Pin 4 of the external user I/O, or programmatically through software.

The factory default OVT setting is 110% of the specific MagnaDC power supply's maximum voltage rating.

For more information on setting OVT:

- *Setting OVT from the front panel*
- *Setting OVT from external user I/O*

- *Setting OVT from computer command*

4.3.2 Over Current Trip (OCT)

The SL Series MagnaDC power supply has a programmable Over Current Trip setting used to shutdown the product if an undesired maximum current value is measured across the DC output. The OCT setting can be adjusted to a maximum of 110% of the specific MagnaDC power supply's full scale current rating. An over current condition must be sustained for ~ 60 ms for the OCT fault to register; this fault is purposely delayed to avoid nuisance trips.

When an OCT fault occurs, a contactor on the AC input opens, providing a mechanical break to the power processing circuits, but leaving the control power in place. An OCT alarm is indicated by red OCT LED illumination on the front panel, +5V on Pin 32 of the external user I/O and by computer command by querying the Questionable Register. To resume operation, the DC output current must drop below the MagnaDC power supply's OCT setting, the *Clear* function must be issued, and the input re-energized with the *Start* function.

The OCT setting can be programmed through the front panel, through 0-10V analog input on Pin 23 of the external user I/O, or programmatically through software.

The factory default OCT setting is 110% of the specific MagnaDC power supply's maximum current rating.

For more information on setting OCT:

- *Setting OCT from the front panel*
- *Setting OCT from external user I/O*
- *Setting OCT from computer command*

4.3.3 Thermal Fault (THL)

The SL Series MagnaDC power supply has internal thermal switches on its various heatsinks to ensure operation at temperatures within the product's design specifications. A thermal fault typically results from one of the following conditions:

- Operating in an environment above the maximum ambient temperature specification.
- Blocking the air intake.
- Internal fan or solenoid failure.
- Broken electrical contact to thermal switches.
- Coolant intake temperatures are above those recommended (water cooled units only).

When a thermal fault occurs, a contactor on the AC input opens, providing a mechanical break to the power processing circuits, but leaving the control power and fan power in place. The user is prevented from enabling the MagnaDC power supply through the front panel, external interface, or computer command. A thermal alarm is indicated by red THL LED illumination on the front panel, +5V on Pin 9 of the external user I/O and by computer command by querying the Questionable Register.

To resume operation, the internal thermal temperature must return to safe operating temperatures, the *Clear* function must be issued, and the input re-energized with the *Start* function. Allow sufficient time for the MagnaDC power supply to cool after a thermal fault occurs, otherwise, the product will enter immediately back into a thermal fault after starting.

4.3.4 Interlock (LOC)

The Interlock feature disables the MagnaDC power supply by entering a soft fault state. The safety feature is triggered whenever the +5V signal applied to the interlock pin is broken. By default, interlock is disabled when the MagnaDC power supply ships from the factory. Interlock can be enabled from the *front panel* or *computer interface*. Once interlock is assigned to one of the pins listed in *external user I/O* +5V must be present to operate the product. There are two methods of providing +5V to the interlock pin:

- Providing a physical short from the provided *external user I/O* +5V signal (Pin 26) to the interlock digital input (Pin 37)
- Using an external user supplied +5V signal with reference to the *external user I/O* GND signal (Pin 7).

With either method, an external dry contact may be used to trigger the interlock.

When the +5V interlock signal is broken, the dissipative elements are switched out of the DC bus using a high-speed switching device, the MagnaDC power supply is placed in a soft fault state.

To resume normal operation, the +5V signal must first be restored to the interlock input and the *Clear command* issued.

By factory default, the SL Series MagnaDC power supply ships with Interlock functionality disabled. For more information on enabling or disabling the interlock feature:

- *Enabling or disabling interlock via the front panel*
- *Enabling or disabling interlock via computer command*
- *Interlock Set input on the User I/O connection*

4.3.5 Phase Loss (PHL)

MagnaDC power supplies monitor the AC input voltages to ensure the rated input voltage is present. In the event that the AC input voltage falls below 10% of the rated input voltage — an under-voltage AC input condition — the product will trip with a phase loss alarm.

> **Note**
>
> The phase loss diagnostic is not available on SL Series products.

When a phase loss occurs while the product is operating, a contactor on the AC input opens, providing a mechanical break to the power processing circuits, but leaving the control power and fan power in place. The user is prevented from enabling the MagnaDC power supply through the front panel, external interface, or computer command. When a phase loss occurs while the product is in standby, the user will also be prevented from enabling the product through the front panel or external interface. A phase loss alarm is indicated by red PHL LED illumination on the front panel or by computer command by querying the Questionable Register.

The product should not be operated with a phase imbalance. When a phase loss alarm occurs, inspect the AC input connections to ensure secure connections. Investigate the AC power system and monitor the bus voltage to ensure it is providing a steady line-to-line voltage in accordance with the power supply's rated AC input voltage requirements.

To resume operation, the AC line voltage must return to within 10% of the product's nominal AC input voltage requirement, the *Clear* function must be issued, and the input re-energized with the *Start* function.

4.3.6 Program Line Fault (PGL)

The SL Series MagnaDC power supply monitors the 0-10V analog programming inputs on the external user I/O connector for erroneous input. In the event that any applied analog input voltage is greater than 12.5 V, a contactor on the AC input opens, providing a mechanical break to the power processing circuits, but leaving the control power in place. An PGL alarm is indicated by red PGL LED illumination on the front panel, +5V on Pin 27 of the external user I/O and by computer command by querying the Questionable Register.

To resume operation, the analog input voltages must return to under 12.5 Vdc, the *Clear* function must be issued, and the input re-energized with the *Start* function. Investigate the source of the erroneous analog input voltage to prevent possible damage.

Caution

Analog input programming voltages in excess of 20 Vdc will damage integrated circuits on the control board and require control board replacement. Always verify analog input signals with an external voltmeter before connecting them to the MagnaDC power supply.

4.3.7 Fuse (FSE)

MagnaDC power supplies contain a variety of power and control fuses. A fuse alarm is indicated by red FSE LED illumination on the front panel, +5V on Pin 15 of the external user I/O and by computer command by querying the Questionable Register. The fuse alarm indicates that one of the three main fuses has cleared.

Note

The fuse (FSE) alarm and its front panel indicator are available on TS Series and MT Series products only. SL Series and XR Series products contain physical fuses but do not provide a fuse diagnostic alarm.

Note

MT Series Products Only. For the power processing circuitry, MT Series programmable DC power supplies are equipped with a 3-phase AC breaker instead of fuses. In the event the breaker is tripped or if the breaker is not engaged after turning on control power via the front panel control power switch, the FSE alarm will indicate. After engaging the breaker to the on position, the procedures to clear the FSE alarm are as noted below.

To resume operation, the fuse must be replaced, the *Clear* function must be issued, and the input re-energized with the *Start* function.

For more details on fuse ratings and replacement, see *Fuse Rating*.

CHAPTER

FIVE

OPERATION: FRONT PANEL

The standard SL Series front panel provides local control and display of the product's various parameters and settings. Fig. 5.1 provides an overview of the standard SL Series front panel and Fig. 5.2 provides an overview of the Blank C Version SL Series front panel. A numbered list corresponding to the indicators on the front panels is located below the front panel figures.

Fig. 5.1: Standard SL Series front panel

Fig. 5.2: Blank C Version SL Series front panel

1. **Control Power Switch.** Power switch energizes control circuits without engaging main power.
2. **Start and Stop Buttons.** Engages and disengages main power via integrated mechanical contactor.
3. **Function Keys.**
   - **MENU:** Selects function
   - **ITEM:** Selects item within function
   - **V/I DIS:** Displays voltage and current set points. Also functions as the up arrow.
   - **TRIP DIS:** Displays OVT and OCT set points Also functions as the down arrow.
   - **CLEAR:** Clears settings or resets fault
   - **ENTER:** Select item
4. **Voltage and Current Knobs.** Stepless rotary knob to set voltage and current.
5. **Voltage and Current Displays.** Meters display output voltage, output current, voltage set point, current set point, over voltage trip and over current trip.

6. **Diagnostic Alarms**
    - **LOC:** Interlock
    - **PGL:** External input voltage beyond limits
    - **THL:** Over-temperature condition
    - **OVT:** Over-voltage protection has tripped
    - **OCT:** Over-current protection has tripped
7. **Status Indicators**
    - **POWER:** Indicates power output
    - **STANDBY:** Indicates control power only
8. **Configuration Indicators**
    - **REM SEN:** Remote sense enabled. See *Remote Sense Connection* for more information.
    - **INT CTL:** Front panel start/stop/clear enabled
    - **EXT CTL:** External start/stop/clear enabled
    - **ROTARY:** Front panel rotary knob input
    - **EXT PGM:** External analog voltage-current control
    - **REMOTE:** Computer control

By factory deafult, the SL Series MagnaDC power supply is configured for local sensing, rotary control, internal programming, and voltage input as specified on the rear serial label. SLC Series power supplies cannot be controlled through the front panel other than engaging the control power using the black rocker switch. While in ROTARY configuration, the front panel voltage and current controls set the boundary limits for output voltage and current, respectively. The following sections describe how to use all of the front panel features. Front panel commands are broken into four groups: run mode commands, set point commands, configuration commands, and calibration commands.

5.1 Setting Trip Points

5.1.1 Over Voltage Trip

Program the voltage trip setting used to shut the product off with a fault. The product must be in ROTARY set point source to program over voltage trip from the front panel.

MENU Button ‣ Up Arrow (V/I DIS) to raise or Down Arrow (TRIP DIS) to lower

5.1.2 Over Current Trip

Program the current trip setting used to shut the product off with a fault. The product must be in ROTARY set point source to program over current trip from the front panel.

MENU Button ‣ ITEM Button ‣ Up Arrow (V/I DIS) to raise or Down Arrow (TRIP DIS) to lower

5.2 Configuring Set Point Source

The set point source determines where the SL Series MagnaDC power supply will receive its voltage, current, over voltage trip, and over current trip set points. The instructions below detail how to enable the various set point source configurations. Only one set point source can be enabled at a time.

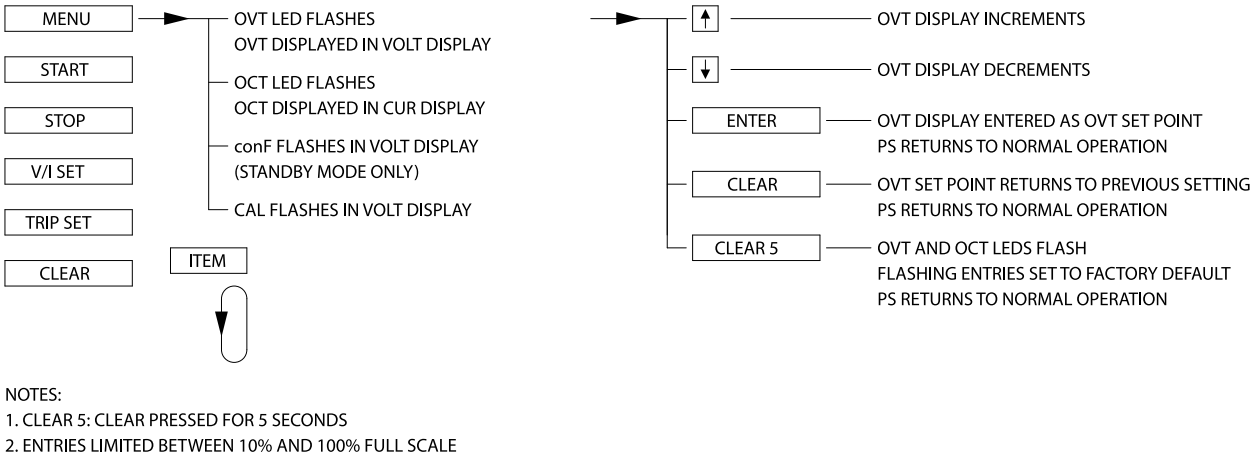

Fig. 5.3: Set the over voltage trip (OVT) from the front panel

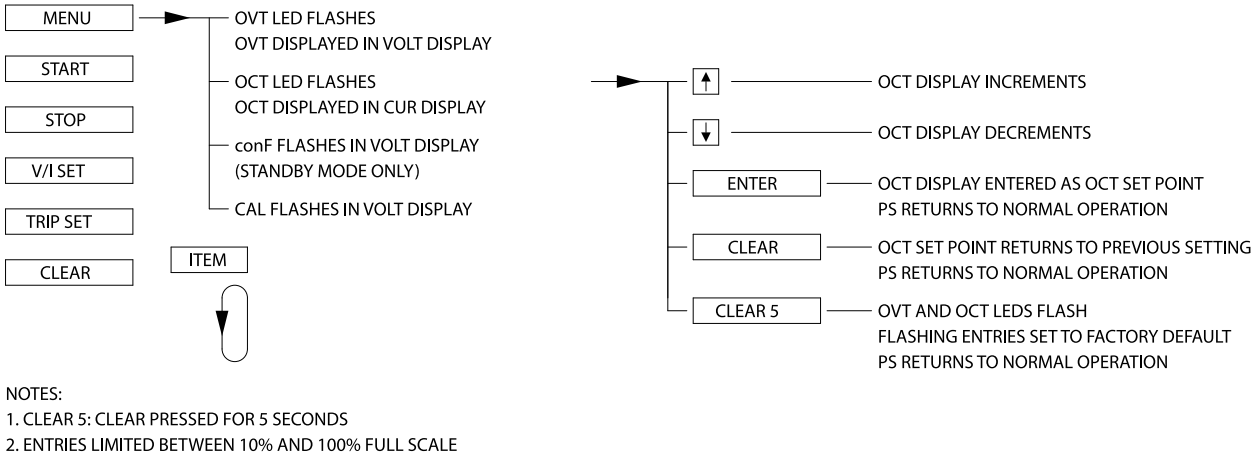

Fig. 5.4: Set the over current trip (OCT) from the front panel

> **Note**
>
> The product must be in Standby when configuring the set point source.

5.2.1 Rotary (ROTARY)

Set point control from the front panel knobs.

MENU Button ‣ ITEM Button x2 ‣ ENTER Button ‣ ITEM Button x3 ‣ ENTER Button (Enable)

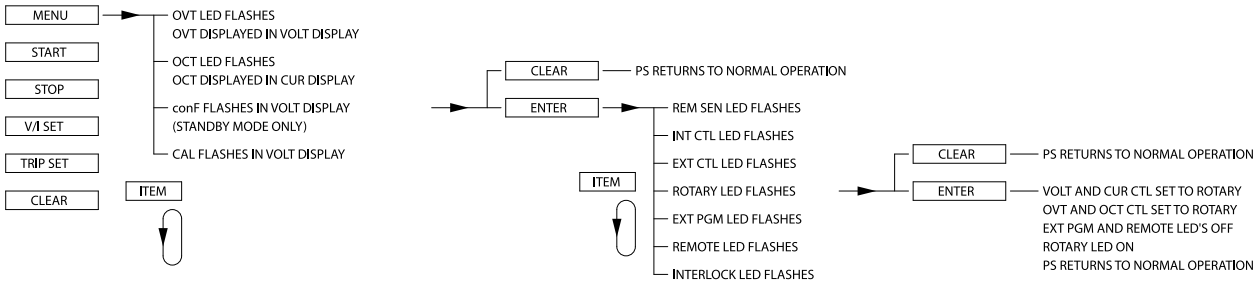

Fig. 5.5: Enable rotary (ROTARY) from the front panel

5.2.2 External Program (EXT PGM)

Set point control from the 0-10V analog inputs on the JS1 external user I/O connector.

MENU Button ‣ ITEM Button x2 ‣ ENTER Button ‣ ITEM Button x4 ‣ ENTER Button (Enable)

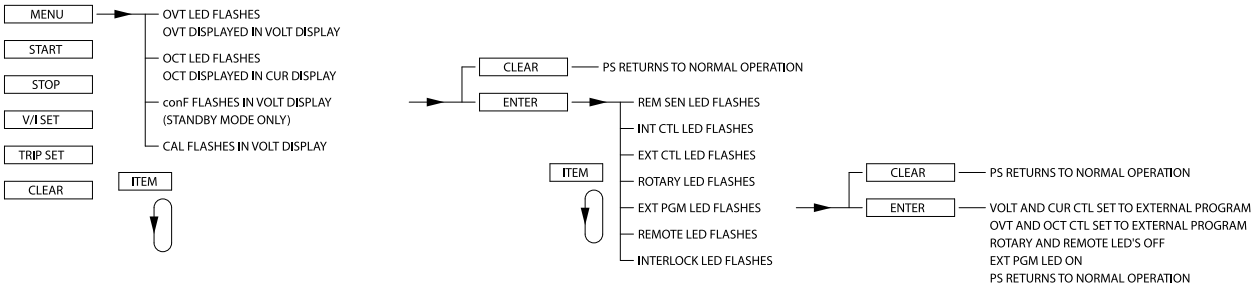

Fig. 5.6: Enable external program (EXT PGM) for external User I/O from the front panel

5.2.3 Remote (REMOTE)

Set point control from any computer interface.

MENU Button ‣ ITEM Button x2 ‣ ENTER Button ‣ ITEM Button x5 ‣ ENTER Button (Enable)

5.3 Configuring Functionality

5.3.1 Remote Sense (REM SEN)

Set the product to enable or disable voltage sensing from the high impedance *remote sense leads*, to provide compenstation for voltage drop in the cables.

MENU Button ‣ ITEM Button x2 ‣ ENTER Button ‣ ENTER Button (Enable) or CLEAR Button (Disable)

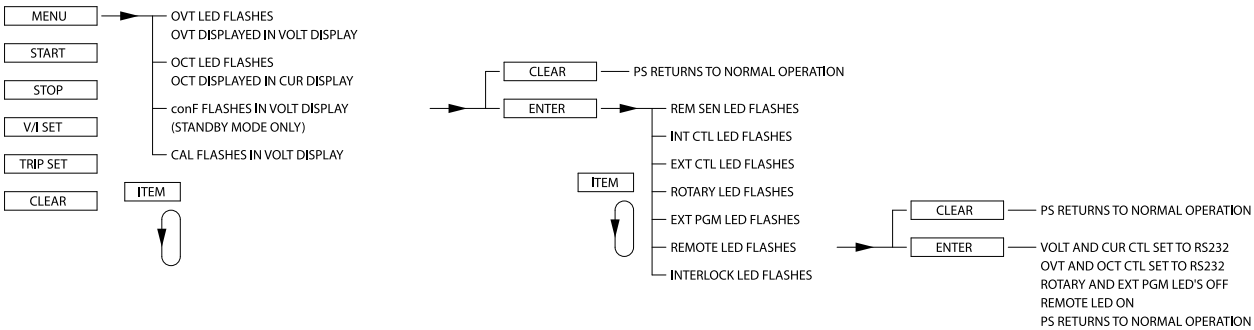

Fig. 5.7: Enable remote (REMOTE) computer programming from the front panel

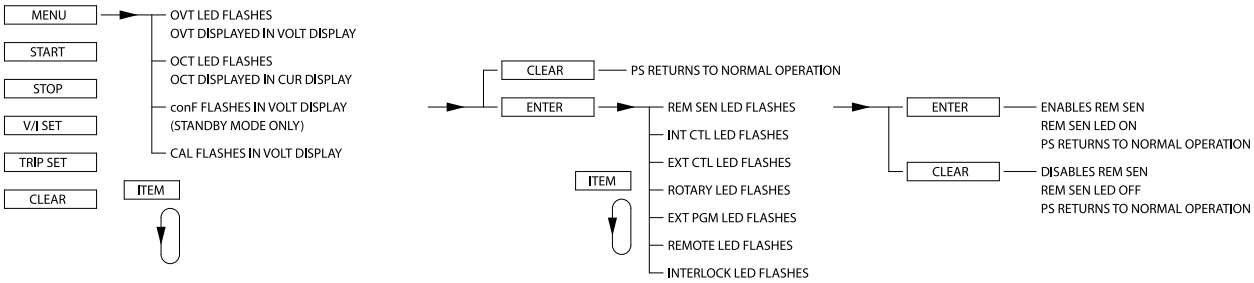

Fig. 5.8: Enable or disable remote sense functionality

5.3.2 Internal Control (INT CTL)

Allows for front panel control of *Start*, *Stop*, and *Clear* functions.

MENU Button ‣ ITEM Button x2 ‣ ENTER Button ‣ ITEM Button x1 ‣ ENTER Button (Enable) or CLEAR Button (Disable)

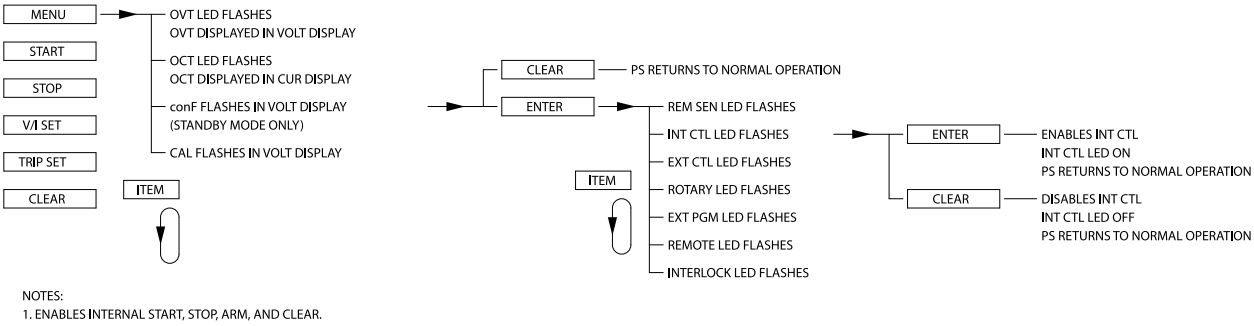

Fig. 5.9: Enable or disable internal control functionality

5.3.3 External Control (EXT CTL)

Allows for JS1 37-pin external user I/O digital input control of *Start*, *Stop*, and *Clear* functions.

MENU Button ‣ ITEM Button x2 ‣ ENTER Button ‣ ITEM Button x2 ‣ ENTER Button (Enable) or CLEAR Button (Disable)

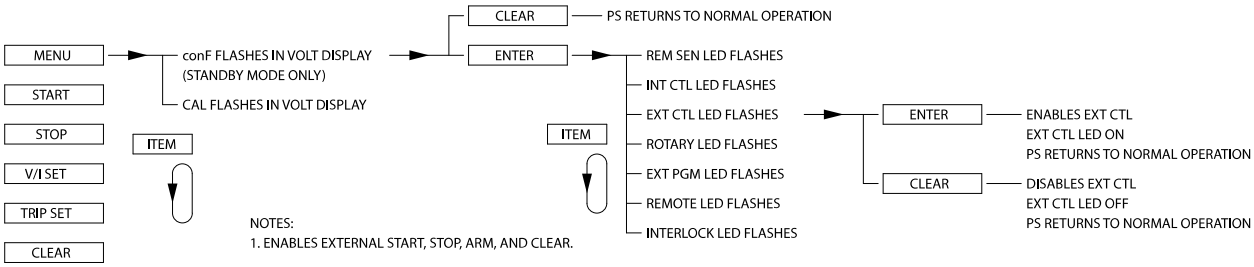

Fig. 5.10: Enable or disable external control functionality

5.3.4 Interlock (LOC)

Enable or disable *interlock* functionality.

MENU Button ‣ ITEM Button x2 ‣ ENTER Button ‣ ITEM Button x6 ‣ ENTER Button (Enable) or CLEAR Button (Disable)

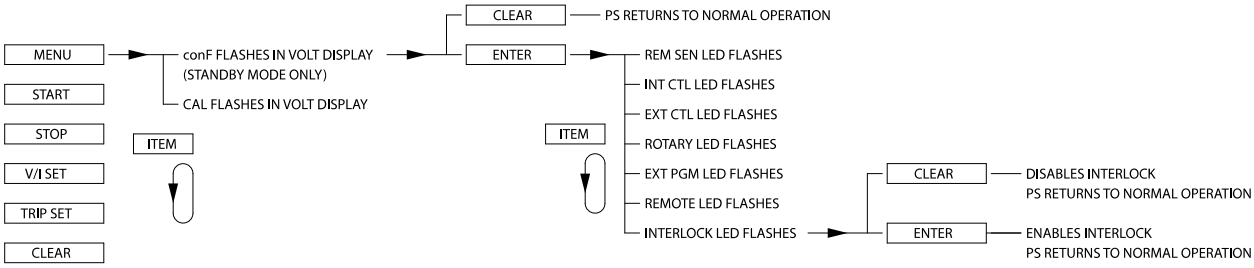

Fig. 5.11: Enable or disable interlock functionality

5.4 Calibration

This section details how to access and change the digital calibration potentiometers from the front panel. For more details on the calibration procedure for the SL Series MagnaDC power supply, refer to *Calibration*.

Fig. 5.12 illustrates how to utilize the calibration commands using the front panel. Calibration commands allow calibration of five digital potentiometers, display of the firmware and hardware revisions, and reset the digital potentiometers to the factory calibration settings. All of these commands can be made when the power supply is in either the standby or power mode state.

To enter the calibration commands, first press the menu key. The over voltage trip LED will initially flash. Then press the item key 3 times. The voltage display will flash CAL (calibration). Press enter for 10 seconds or press clear to exit the calibration command menu. Upon entering the calibration commands, the output voltage will be displayed in the voltage display, the potentiometer setting, 0 to 255, will be displayed in the right three digits of the current display, and P and 1 will alternately flash in the left digit of the current display. Potentiometer 1 adjusts the gain of the voltage feedback amplifier, potentiometer 2 adjusts the input offset voltage of the voltage feedback amplifier, potentiometer 3 adjusts the gain of the current feedback amplifier, potentiometer 4 adjusts the input offset voltage of the current feedback amplifier, and potentiometer 5 adjusts the gain of the reference which is used for the digital to analog and analog to digital converters.

Pressing the item key advances control to potentiometer 2. The left digit of the current display will alternately flash P and 2, the output voltage will be displayed in the voltage display, and the potentiometer setting, 0 to 255, will be displayed in the right three digits of the current display.

Pressing the item key again will advance the control to potentiometer 3. Now the output current will be displayed in the current display, the potentiometer setting, 0 to 255, will be displayed in the right three digits of the voltage display, and the left digit of the voltage display will alternately flash P and 3.

Press the item key again will advance to control potentiometer 4. The left digit of the voltage display will alternately flash P and 4, the output current will be displayed in the current display, and potentiometer, 0 to 255, will be displayed in the right three digits of the voltage display.

To advance adjustment to potentiometer 5, press the item key again. The left digit of the current display will alternately flash P and 5, the output voltage will be displayed in the voltage display, and the potentiometer setting, 0 to 255, will be displayed in the right three digits of the current display.

Once a digital potentiometer has been selected for adjustment, pressing the up/down keys increments or decrements the potentiometer setting, respectively. To save the new setting, press the enter key or press the clear key to exit the routine. Instructions for the calibration procedure are discussed in *Calibration*.

After selecting digital potentiometer 5, pressing the item key displays the firmware revision in the voltage display and the hardware revision in the current display. Pressing the item key again displays dEF (default) in the voltage display. Pressing the enter key resets the five digital potentiometers to the factory default settings.

To exit the calibration menu, press the item key until rEt (return) appears in the voltage display. Press the enter key to exit the calibration menu.

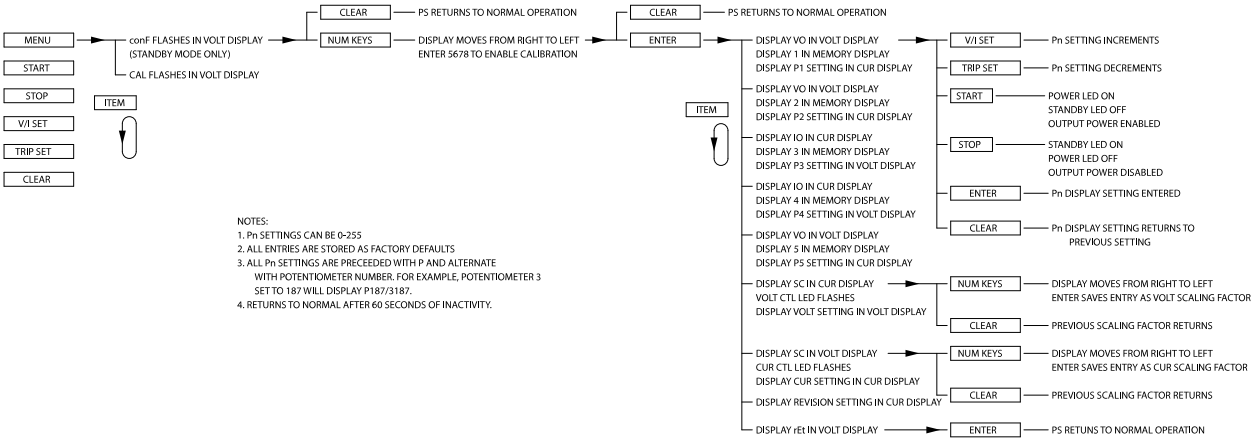

Fig. 5.12: Front panel calibration menu

CHAPTER

SIX

EXTERNAL USER I/O

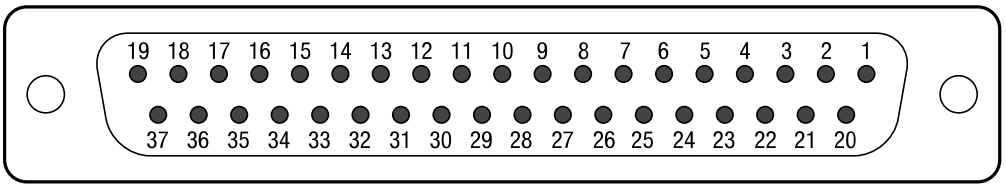

Fig. 6.1: SL Series MagnaDC power supply D-Sub JS1 37-pin external user I/O connector (female) pin numbering

Table 6.1: Complete pin listing and definitions available on the JS1 37-pin external user I/O port

User I/O Pin	Definition	Signal Type	Description
1	REF GND	Reference Ground	Ground to be used as analog voltage input-output reference
2	REF GND	Reference Ground	Ground to be used as analog voltage input-output reference
7	GND	Ground	Ground to be used as digital input-output reference
6	+2.5V REF CAL	Reference Voltage	2.5 V reference voltage used for calibration purposes
21	+10V REF	Reference Voltage	10.0 V reference supply, relative to the REF GND pins. Reference capable of supplying a maximum of 25 mA.
26	+5V REF	Reference Voltage	5.0 V reference supply, relative to the REF GND pins. Reference capable of supplying a maximum of 25 mA.
3	VREF EXT	*Analog Input*	External voltage set point reference, **0-10 Vdc**, proportional to the power supply output voltage. 0 Vdc on VREF EXT is equivalent to 0 Vdc output voltage, and 10 Vdc is equivalent to 100% full scale output voltage.
4	TVREF EXT	*Analog Input*	External over voltage trip set point reference, **0-10 Vdc**, proportional to the power supply output voltage. 0 Vdc on TVREF EXT is equivalent to 0 Vdc trip reference, and 10 Vdc is equivalent to 110% full scale voltage over voltage trip.
22	IREF EXT	*Analog Input*	External current set point reference, **0-10 Vdc**, proportional to the power supply output current. 0 Vdc on IREF EXT is equivalent to 0 Adc output current, and 10 Vdc is equivalent to 100% full scale output current.
23	TIREF EXT	*Analog Input*	External over current trip set point reference, **0-10 Vdc**, proportional to the power supply output current. 0 Vdc on TIREF EXT is equivalent to 0 Adc trip reference, and 10 Vdc is equivalent to 110% full scale current over voltage trip.
25	VMOD	*Analog Input*	Modulation voltage input for non-linear profile emulation or voltage/current addition, subtraction, or multiplication factors.

continues on next page

Table 6.1 – continued from previous page

User I/O Pin	Definition	Signal Type	Description
5	VO2	*Analog Output*	Output voltage reference, **0-10 Vdc**, proportional to the power supply's real-time output voltage. 0 Vdc on VO2 is equivalent to 0 Vdc output voltage and 10 Vdc is equivalent to 100% full scale output voltage.
24	IO2	*Analog Output*	Output current reference, **0-10 Vdc**, proportional to the power supply's real-time output current. 0 Vdc on IO2 is equivalent to 0 Vdc output current and 10 Vdc is equivalent to 100% full scale output current.
17	START	*Digital Input*	Enables the power supply output. The input contactors are engaged and the power supply will ramp up to the programmed set points.
18	CLEAR	*Digital Input*	Clears a fault condition, returning the power supply to standby.
19	STOP	*Digital Input*	Disables the power supply output. The input contactors are disengaged and the power supply will ramp down to zero voltage and current.
36	ARM	*Digital Input*	Activates autosequencing through memory states. Function only available on the D Version front panel for TS Series and MT Series products.
37	INTERLOCK SET	*Digital Input*	5 Vdc input for interlock signal. If the power supply output is enabled, and the +5 Vdc signal is removed, the power supply will enter into LOC fault condition, and the AC contactors will disengage. The fault will need to be cleared before re-enabling the output. Interlock must be enabled to use this functionality.
8	POWER	*Digital Output*	Indication that the power supply output is enabled.
9	THERMAL	*Digital Output*	Indication that the input power processing devices or output rectifiers have reached a critical temperature. A resetting thermal switch will reset upon cooling.
10	INTERLOCK	*Digital Output*	Indication that the power supply reached a interlock fault condition. This pin will stay active until 5.0 V is restored to INTERLOCK SET (Pin 37) and the fault is cleared. To restart the supply after the fault has been cleared, simply press the start switch.
11	CUR CTL	*Digital Output*	Indication that the power supply is operating in current-mode control.
12	STANDBY/ALM	*Digital Output*	Indication that the power supply is in standby or alarm condition. In both states, the output is disengaged.
13	ALM	*Digital Output*	Indication that the power supply is in alarm condition resulting from a fault. The alarm will need to be cleared before re-enabling the output.
14	EXT CTL	*Digital Output*	Indication that external start, stop, and clear is activated for use.
15	FUSE	*Digital Output*	Indication that the fuse alarm is activated. In units where circuit breakers are present, in place of fuses, an open circuit breaker connection will trigger the fuse alarm. Fuse alarm is only applicable in TS Series, and MT Series power supplies.
27	PGM LINE	*Digital Output*	Indication that an analog input signal is beyond the range of control (greater than 12.50 V). These lines are constantly monitored and if any of these references are set above the normal bounds, program line diagnostics will disable the supply.
28	STANDBY	*Digital Output*	Indication that the control circuits are powered, but the supply is disabled through the AC contactor. This is the power supply's normal off condition. To start the supply, press the start switch. To place the supply in standby, press the stop switch.
29	PHASE LOSS	*Digital Output*	Indication that there's a problem with the power mains voltage. Phase loss alarm is only applicable in XR Series, TS Series, and MT Series power supplies.
30	VOLT CTL	*Digital Output*	Indication that the power supply is operating in voltage-mode control.

continues on next page

Table 6.1 – continued from previous page

User I/O Pin	Definition	Signal Type	Description
32	OCT	*Digital Output*	Indication that the supply has exceeded the over current trip reference. This condition causes the supply to shutdown into a fault state. To clear this condition, the user must press the clear button on the front panel with internal control enabled or by applying 5.0 V to CLEAR (Pin 18) of JS1 with external control enabled. To restart the supply after the fault has been cleared, simply press the start switch. A secondary over current trip diagnostic provides protection of internal circuitry due to abnormal line and load conditions or due to failed internal circuitry. This over current trip condition requires the control power to be recycled by toggling the power switch off and on.
33	INT CTL	*Digital Output*	Indication that front panel start, stop, and clear is activated for use.
34	OVT	*Digital Output*	Indication that the supply has exceeded the over voltage trip reference. This condition causes the supply to shutdown into a fault state. To clear this condition, the user must press the clear button on the front panel with internal control enabled or by applying 5.0 V to CLEAR (Pin 18) of JS1 with external control enabled. To restart the supply after the fault has been cleared, simply press the start switch.

6.1 Analog Inputs

Table 6.2: Analog inputs available on the JS1 37-pin external user I/O connector

User I/O Pin	Definition	Description
3	VREF EXT	External voltage set point reference, **0-10 Vdc**, proportional to the power supply output voltage. 0 Vdc on VREF EXT is equivalent to 0 Vdc output voltage, and 10 Vdc is equivalent to 100% full scale output voltage.
4	TVREF EXT	External over voltage trip set point reference, **0-10 Vdc**, proportional to the power supply output voltage. 0 Vdc on TVREF EXT is equivalent to 0 Vdc trip reference, and 10 Vdc is equivalent to 110% full scale voltage over voltage trip.
22	IREF EXT	External current set point reference, **0-10 Vdc**, proportional to the power supply output current. 0 Vdc on IREF EXT is equivalent to 0 Adc output current, and 10 Vdc is equivalent to 100% full scale output current.
23	TIREF EXT	External over current trip set point reference, **0-10 Vdc**, proportional to the power supply output current. 0 Vdc on TIREF EXT is equivalent to 0 Adc trip reference, and 10 Vdc is equivalent to 110% full scale current over voltage trip.
25	VMOD	Modulation voltage input for non-linear profile emulation or voltage/current addition, subtraction, or multiplication factors.

The SL Series MagnaDC power supply has 5 analog inputs, as detailed in Table 6.2. These analog inputs can accept 0-10 V input signals and have a 10 kΩ input impedance.

To use the analog inputs, the SL Series MagnaDC power supply must be configured for External Program (EXT PGM). When properly enabled, the EXT PGM LED on the front panel will be illuminated. EXT PGM status can also be queried by computer command. For more information on enabling EXT PGM:

- *Enabling EXT PGM from the front panel*
- *Enabling EXT PGM from computer command*

Once enabled, all voltage and current programming along with trip reference programming must be done by the JS1 external user I/O connector. Ensure that VREF EXT (Pin 3), TVREF EXT (Pin 4), IREF EXT (Pin 22), and TIREF

EXT (Pin 23) are all connected to a programming signal. In most applications, three of the four analog input references are jumpered to the +10V REF (Pin 21) with the user supplied external reference signal used for the remaining signal.

For the best possibility fidelity for analog programming, use the reference ground REF GND (Pin 1 or Pin 2) as the reference for voltage programming inputs VREF EXT (Pin 3) and TVREF EXT (Pin 4) and current programming inputs IREF EXT (Pin 22) and TIREF EXT (Pin 23).

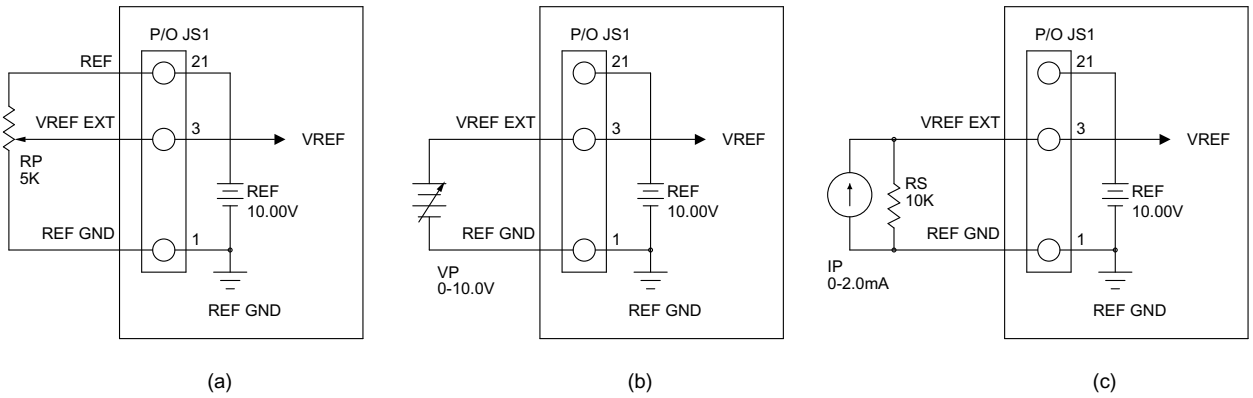

Fig. 6.2: External **(a)** resistive, **(b)** voltage, and **(c)** current programming

6.1.1 External Voltage Source Programming

For programming using a voltage source, an external 10.0 V voltage source is placed between VREF EXT (Pin 3) and REF GND (Pin 1) of JS1 to control the output voltage.

The current set point, over voltage trip, and over current trip can be programmed in the same manner. Referring to the *Analog Inputs* pin identification, use IREF EXT (Pin 22) to program the current set point, TVREF EXT (Pin 4) to program over voltage trip, and TIREF EXT (Pin 23) to program over current trip. The power supply has been calibrated to produce full scale output voltage and current with 10.0 V inputs at the external reference input terminals. Furthermore, over voltage and over current trip have been calibrated to trip at 110% full scale output voltage and current with 10.0 V inputs at the external reference input terminals. Most commonly, IREF EXT (Pin 22), TVREF EXT (Pin 4), and TIREF EXT (Pin 23) are all jumpered together and tied to +10V REF (Pin 21).

6.1.2 External Current Source Programming

To produce an external analog voltage reference to VREF EXT (Pin 3), a current source is applied to a shunt resistor. Using a 2 mA current source, place a 10.0 kΩ precision metal film resistor between VREF EXT (Pin 3) and REF GND (Pin 1). The input impedance between terminals 1 and 3 is 10.0 K and paralleling the additional resistor produces an equivalent resistance of 5 K. The 2 mA current source will produce 10.0 V at the external voltage reference input which will produce full scale output voltage.

The current set point, over voltage trip, and over current trip can be programmed in the same manner. Referring to the *Analog Inputs* pin identification, use IREF EXT (Pin 22) to program the current set point, TVREF EXT (Pin 4) to program over voltage trip, and TIREF EXT (Pin 23) to program over current trip. The power supply has been calibrated to produce full scale output voltage and current with 10.0 V inputs at the external reference input terminals. Furthermore, over voltage and over current trip have been calibrated to trip at 110% full scale output voltage and current with 10.0 V inputs at the external reference input terminals. Most commonly, IREF EXT (Pin 22), TVREF EXT (Pin 4), and TIREF EXT (Pin 23) are all jumpered together and tied to +10V REF (Pin 21).

6.1.3 External Resistive Source Programming

Resistive programming requires connection of an external potentiometer or resistors between +10V REF (Pin 21), VREF EXT (Pin 3), and REF GND (Pin 1) of the JS1 connector. +10V REF (Pin 21) is a 10.0 V precision reference, REF GND (Pin 1) is the reference ground, and VREF EXT (Pin 3) is the voltage set point input. Like front panel rotary control, the precision reference produces a voltage across the potentiometer or resistors which is then used to produce the voltage set point. Metal film resistors or a wire wound potentiometer will result in the lowest temperature coefficient.

The current set point, over voltage trip, and over current trip can be programmed in the same manner. Referring to the *Analog Inputs* pin identification, use IREF EXT (Pin 22) to program the current set point, TVREF EXT (Pin 4) to program over voltage trip, and TIREF EXT (Pin 23) to program over current trip. The power supply has been calibrated to produce full scale output voltage and current with 10.0 V inputs at the external reference input terminals. Furthermore, over voltage and over current trip have been calibrated to trip at 110% full scale output voltage and current with 10.0 V inputs at the external reference input terminals. Most commonly, IREF EXT (Pin 22), TVREF EXT (Pin 4), and TIREF EXT (Pin 23) are all jumpered together and tied to +10V REF (Pin 21).

6.2 Analog Outputs

Table 6.3: Analog outputs available on the JS1 37-pin external user I/O port

User I/O Pin	Definition	Description
5	VO2	Output voltage reference, **0-10 Vdc**, proportional to the power supply's real-time output voltage. 0 Vdc on VO2 is equivalent to 0 Vdc output voltage and 10 Vdc is equivalent to 100% full scale output voltage.
24	IO2	Output current reference, **0-10 Vdc**, proportional to the power supply's real-time output current. 0 Vdc on IO2 is equivalent to 0 Vdc output current and 10 Vdc is equivalent to 100% full scale output current.

Two analog outputs are provided for monitoring output voltage and current on the JS1 37-pin external user I/O connector. As illustrated in Fig. 6.3, output monitoring voltage, VO2 (Pin 5), can be obtained by monitoring the voltage between terminals VO2 (Pin 5) of JS1 and REF GND (Pin 1 or Pin 2) of JS1. Output monitoring current, IO2 (Pin 24), can be obtained by monitoring the voltage between terminals IO2 (Pin 24) of JS1 and REF GND (Pin 1 or Pin 2) of JS1. Like the programming inputs, full scale output voltage and current will produce 10.0 V. The output impedance of the analog monitoring terminals is 100 Ω.

6.3 Digital Inputs

Table 6.4: Digital inputs available on the JS1 37-pin external user I/O port

User I/O Pin	Definition	Description
17	START	Enables the power supply output. The input contactors are engaged and the power supply will ramp up to the programmed set points.
18	CLEAR	Clears a fault condition, returning the power supply to standby.
19	STOP	Disables the power supply output. The input contactors are disengaged and the power supply will ramp down to zero voltage and current.
36	ARM	Activates autosequencing through memory states. Function only available on the D Version front panel for TS Series and MT Series products.
37	INTERLOCK SET	5 Vdc input for interlock signal. If the power supply output is enabled, and the +5 Vdc signal is removed, the power supply will enter into LOC fault condition, and the AC contactors will disengage. The fault will need to be cleared before re-enabling the output. Interlock must be enabled to use this functionality.

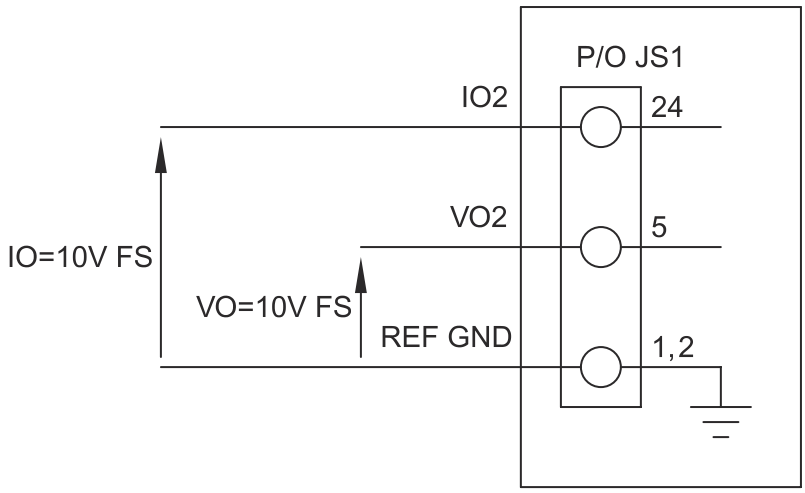

Fig. 6.3: External monitoring output **(a)** voltage and **(b)** current

All digital input lines are located on the JS1 37-pin external user I/O connector located on the rear panel. As illustrated in Fig. 6.4, the digital input lines are START (Pin 17), STOP (Pin 19), CLEAR (Pin 18), and INTERLOCK SET (Pin 37). Functionally, the digital input control lines emulate the functions on the front panel when external control (EXT CTL) is enabled, indicated by the EXT CTL light on the front panel. Digital control lines may be paralleled with other supplies to allow simultaneous control. For more information on enabling EXT CTL:

- *Enabling EXT CTL from the front panel*
- *Enabling EXT CTL from computer command*

All digital input lines are triggered by a external momentary (pulsed) +5V signal. If STOP (Pin 19) is left high, it will take precedence over the START (Pin 17) signal.

A +5V reference (+5V REF) is provided on Pin 26 with respect to ground. This reference voltage can be used in combination with user-supplied dry contacts to trigger the digital inputs.

Interlock set requires a either a physical short between +5V REF (Pin 26) and INTERLOCK SET (Pin 37) of the JS1 37-pin external user I/O connector or application of a +5V source with the positive connection at INTERLOCK SET (Pin 37) of JS1 and the negative connection at GND (Pin 7) of JS1. One of these two connections must be made to enable operation of the power supply. If the interlock connection is broken then the LOC (interlock) fault LED lights, the power supply's internal AC contactor opens, and the unit stops processing power. For more information on Interlock functionality:

- *Description of Interlock functionality*

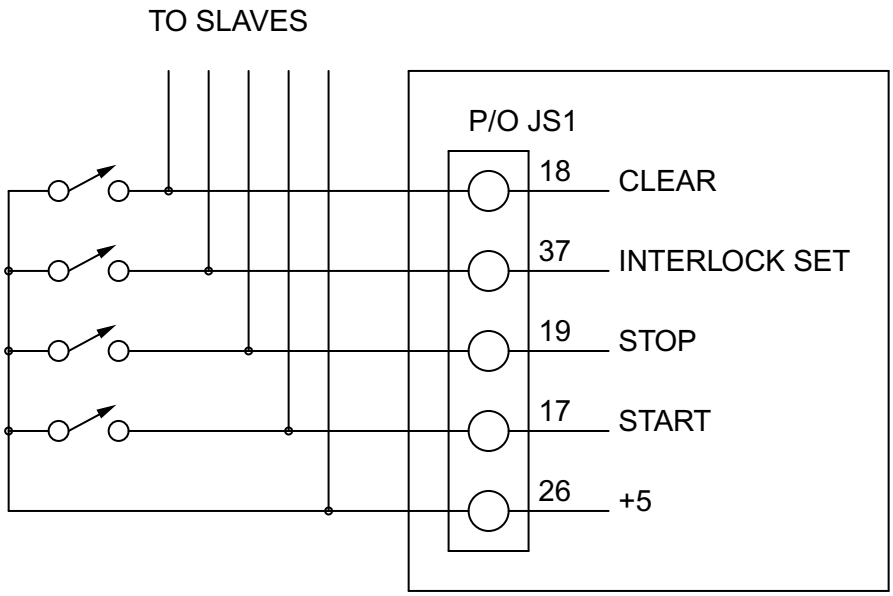

Fig. 6.4: Digital inputs control lines

6.4 Digital Outputs

Table 6.5: Digital outputs available on the JS1 37-pin external user I/O port

User I/O Pin	Definition	Description
8	POWER	Indication that the power supply output is enabled.
9	THERMAL	Indication that the input power processing devices or output rectifiers have reached a critical temperature. A resetting thermal switch will reset upon cooling.
10	INTERLOCK	Indication that the power supply reached a interlock fault condition. This pin will stay active until 5.0 V is restored to INTERLOCK SET (Pin 37) and the fault is cleared. To restart the supply after the fault has been cleared, simply press the start switch.
11	CUR CTL	Indication that the power supply is operating in current-mode control.
12	STANDBY/ALM	Indication that the power supply is in standby or alarm condition. In both states, the output is disengaged.
13	ALM	Indication that the power supply is in alarm condition resulting from a fault. The alarm will need to be cleared before re-enabling the output.
14	EXT CTL	Indication that external start, stop, and clear is activated for use.
15	FUSE	Indication that the fuse alarm is activated. In units where circuit breakers are present, in place of fuses, an open circuit breaker connection will trigger the fuse alarm. Fuse alarm is only applicable in TS Series, and MT Series power supplies.
27	PGM LINE	Indication that an analog input signal is beyond the range of control (greater than 12.50 V). These lines are constantly monitored and if any of these references are set above the normal bounds, program line diagnostics will disable the supply.
28	STANDBY	Indication that the control circuits are powered, but the supply is disabled through the AC contactor. This is the power supply's normal off condition. To start the supply, press the start switch. To place the supply in standby, press the stop switch.
29	PHASE LOSS	Indication that there's a problem with the power mains voltage. Phase loss alarm is only applicable in XR Series, TS Series, and MT Series power supplies.
30	VOLT CTL	Indication that the power supply is operating in voltage-mode control.
32	OCT	Indication that the supply has exceeded the over current trip reference. This condition causes the supply to shutdown into a fault state. To clear this condition, the user must press the clear button on the front panel with internal control enabled or by applying 5.0 V to CLEAR (Pin 18) of JS1 with external control enabled. To restart the supply after the fault has been cleared, simply press the start switch. A secondary over current trip diagnostic provides protection of internal circuitry due to abnormal line and load conditions or due to failed internal circuitry. This over current trip condition requires the control power to be recycled by toggling the power switch off and on.
33	INT CTL	Indication that front panel start, stop, and clear is activated for use.
34	OVT	Indication that the supply has exceeded the over voltage trip reference. This condition causes the supply to shutdown into a fault state. To clear this condition, the user must press the clear button on the front panel with internal control enabled or by applying 5.0 V to CLEAR (Pin 18) of JS1 with external control enabled. To restart the supply after the fault has been cleared, simply press the start switch.

All digital output lines are connected to the *JS1* 37-pin external user I/O connector. Functionally, the digital output lines provide the means to monitor diagnostic functions as functional status. Fig. 6.5 provides terminal identification for the various digital output lines. Each output monitoring line can drive a 5.0 V, 5.0 mA load. An alarm condition will produce a 5.0 V output at the respective terminal.

Table 6.5 provides an explanation of all the available digital output lines.

Diagnostic functions include *thermal overload*, *interlock*, power, standby, *phase loss*, *program line*, *over voltage*, and *over current*. All diagnostic indicators have memory retention which saves the fault condition until the power supply is reset. To clear a fault condition, the user must press the clear key on the front panel with internal control or by applying +5V to CLEAR (Pin 18) of *JS1* with external control enabled. Alternatively, the supply can be cleared by turning the power supply off and on.

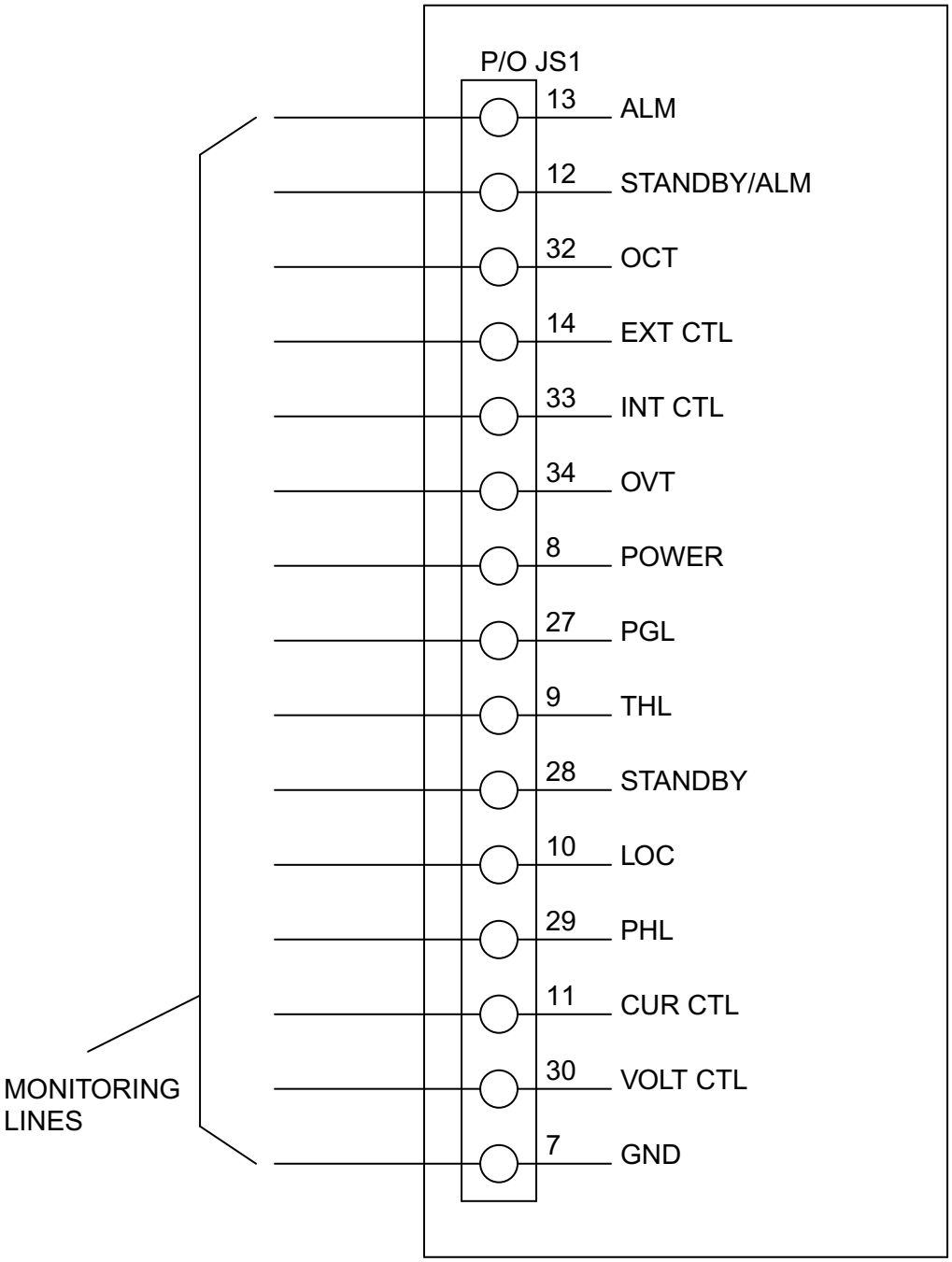

Fig. 6.5: Digital outputs control lines

Diagnostic functions and control modes are embedded in the product's closed loop control. The power supply will operate using voltage control or current control depending on which setting is lowest. Voltage control and current control also contain a soft start functionality which causes voltage and/or current to ramp to the desired set point after power is initiated. The soft start circuitry is reset upon power-on or operation of any diagnostic function.

6.5 Reference Signals and Grounds

Table 6.6: Reference signals and grounds on the JS1 37-pin external user I/O port

User I/O Pin	Definition	Signal Type	Description
1	REF GND	Reference Ground	Ground to be used as analog voltage input-output reference
2	REF GND	Reference Ground	Ground to be used as analog voltage input-output reference
7	GND	Ground	Ground to be used as digital input-output reference
6	+2.5V REF CAL	Reference Voltage	+2.5V reference voltage used for calibration purposes
21	+10V REF	Reference Voltage	10.0 V reference supply, relative to the REF GND pins. Reference capable of supplying a maximum of 25 mA
26	+5V REF	Reference Voltage	5.0 V reference supply, relative to the REF GND pins. Reference capable of supplying a maximum of 25 mA

A variety of reference voltages and grounds are provided on the SL Series MagnaDC power supply *JS1* 37-pin external user I/O connector. Table 6.6 provides an explanation of all the available digital output lines.

The reference grounds (Pin 1, 2; REF GND) are to be used as the reference point for analog inputs and outputs. These ground pins have a series resistance to ground to provide a clean ground reference by mitigate switching noise that may appear on the ground line. It is recommended to use the reference ground pin closest to the analog input or output being used.

The remaining ground (Pin 7; GND) is available as a ground for digital inputs and outputs.

A +5V reference (+5V REF) is provided on Pin 26 with respect to ground. This reference voltage can be used in combination with user-supplied dry contacts to trigger the digital inputs. The +5V REF is capable of supplying a maximum of 25 mA.

A +10V reference (+10V REF) is provided on Pin 21 with respect to ground. While in external program (EXT PGM) mode, this reference voltage can be used to jumper unused analog inputs to their maximum value, instead of providing a user-supplied analog reference voltage. In addition, the +10V REF can be used in conjunction with a user-provided potentiometer for external control at a remote location. The +10V has a 1 Ω impedance and is capable of supplying a maximum of 25 mA.

CHAPTER

SEVEN

PARALLEL AND SERIES

7.1 Parallel

Two or more SL Series power supplies can be connected in parallel to obtain a total output current greater than that available from one power supply. The total output current is the sum of the output currents of the individual power supplies. Each power supply can be turned on or off separately.

7.1.1 Parallel - Direct

The simplest parallel connection involves attaching the positive terminals of all supplies to be paralleled to the positive point of the load and attaching the negative terminals to the negative point of the load. The output current controls of each power supply can be separately set. The output voltage control of one power supply (master) should be set to the desired output voltage; the other power supply (slave) should be set for a slightly higher output voltage. The master will act as a constant voltage source; the slave will act as a constant current source, dropping its output voltage to equal that of the master.

7.1.2 Parallel - Master-Slave

Master-slave parallel operation permits equal current sharing under all load conditions and allows complete control of output current from one master power supply. With Magna-Power's master-slave parallel scheme, the master sends signals to control the slave unit's gate driver, ensuring only one control loop and consistent transient response performance.

Fig. 7.1 illustrates the terminal connection for master/slave parallel operation and salient control circuitry. The control cable can be fabricated by the user or purchased as an accessory, *Universal Interface Device (UID47)*, from the factory. These connections perform the following functions:

- Jumper connection between ISO (Pin 16) of the slave power supplies and ISI (Pin 35) of the master power supply connects the slave power supplies current monitoring outputs to the master power supply current monitoring input. This connection allows the current of all slave power supplies to be summed along with that of the master power supply.
- Jumper connection between CONTROL (Pin 31) of the master and slave power supplies connects the control lines between the master and slave power supplies. Command of the control line is automatically selected with the jumper connections.
- Jumper connection between REF GND (Pin 2), VREF EXT (Pin 3), IREF EXT (Pin 22) of the slave power supplies to REF GND (Pin 2) of the master power supply enables control of the slave power supplies from the master power supply.
- Jumper connection between POWER (Pin 8) of the master power supply to START (Pin 17) of the slave power supplies connects the power output digital control line of the master power supply to the start digital control line of the slave power supplies. This connection causes slave units to turn on when the master unit is turned on.
- Jumper connection between STANDBY/ALM (Pin 12) of the master power supply and STOP (Pin 19) of the slave power supplies connects the STANDBY/ALM digital control line of the master power supply to the STOP digital

control line of the slave power supplies. This connection causes the slaves units to turn off when the master unit is turned off or when a diagnostic condition appears.

- Jumper connections between TVREF EXT (Pin 4), +10V REF (Pin 21), and TIREF EXT (Pin 23) of the slave power supplies sets the slave voltage trip and over current trip set points just beyond full scale values.

The master unit can be configured for rotary, external program, or remote input. The slave power supply must be configured for external program (EXT PGM) input.

For more information on setting the slave unit to EXT PGM:

- *Configuring the product for EXT PGM from the front panel*
- *Configuring the product for EXT PGM from computer command*

To add a second slave unit, connect the output terminals of the second slave in parallel with the other two power supplies. Furthermore, connect a second control cable between the second slave unit and the master unit, or use an additional *Universal Interface Device (UID47)* accessory from the factory.

7.2 Series

Two or more power supplies can be connected in series to obtain a total output voltage greater than that available from one power supply. The total output voltage is the sum of the output voltage of the individual power supplies. Each power supply can be turned on or off separately.

Caution

No plus or minus voltage should exceed the product's *output isolation specification* with respect to ground.

Warning

Models with a non-isolated, grounded output (XR Series models rated above 3000 Vdc, which are specified with either the positive or negative output terminal grounded at time of order) must not be series-connected using the procedures in this section. For these models, series operation can only be achieved by connecting one positively grounded supply to one negatively grounded supply, providing a plus and minus configured series system. Contact Magna-Power before series-connecting any grounded-output models.

7.2.1 Series - Direct

The simplest series connection involves attaching the positive terminal of the first supply to the negative terminal of the second supply. The load is connected between the negative terminal of the first supply and the positive terminal of the second supply. The output current controls of each power supply are operative and the current limit is equal to the lowest control setting. If any one output current control is set too low with respect to the total output current, the series power supplies will automatically crossover to constant current operation and the output voltage will drop.

7.2.2 Series - Master-Slave

Master-slave series operation permits equal voltage sharing under all load conditions and allows complete control of output voltage from one master power supply. Fig. 7.2 illustrates the terminal connection for master/slave series operation and salient control circuitry. The control cable can be fabricated by the user or purchased as an accessory, *Universal Interface Device (UID47)*, from the factory. These connections perform the following functions:

- Jumper connection between VO2 (Pin 5) of the master power supply and VREF EXT (Pin 3) of the slave power supplies connects the voltage monitoring voltage on the master power supply to the external voltage set point input

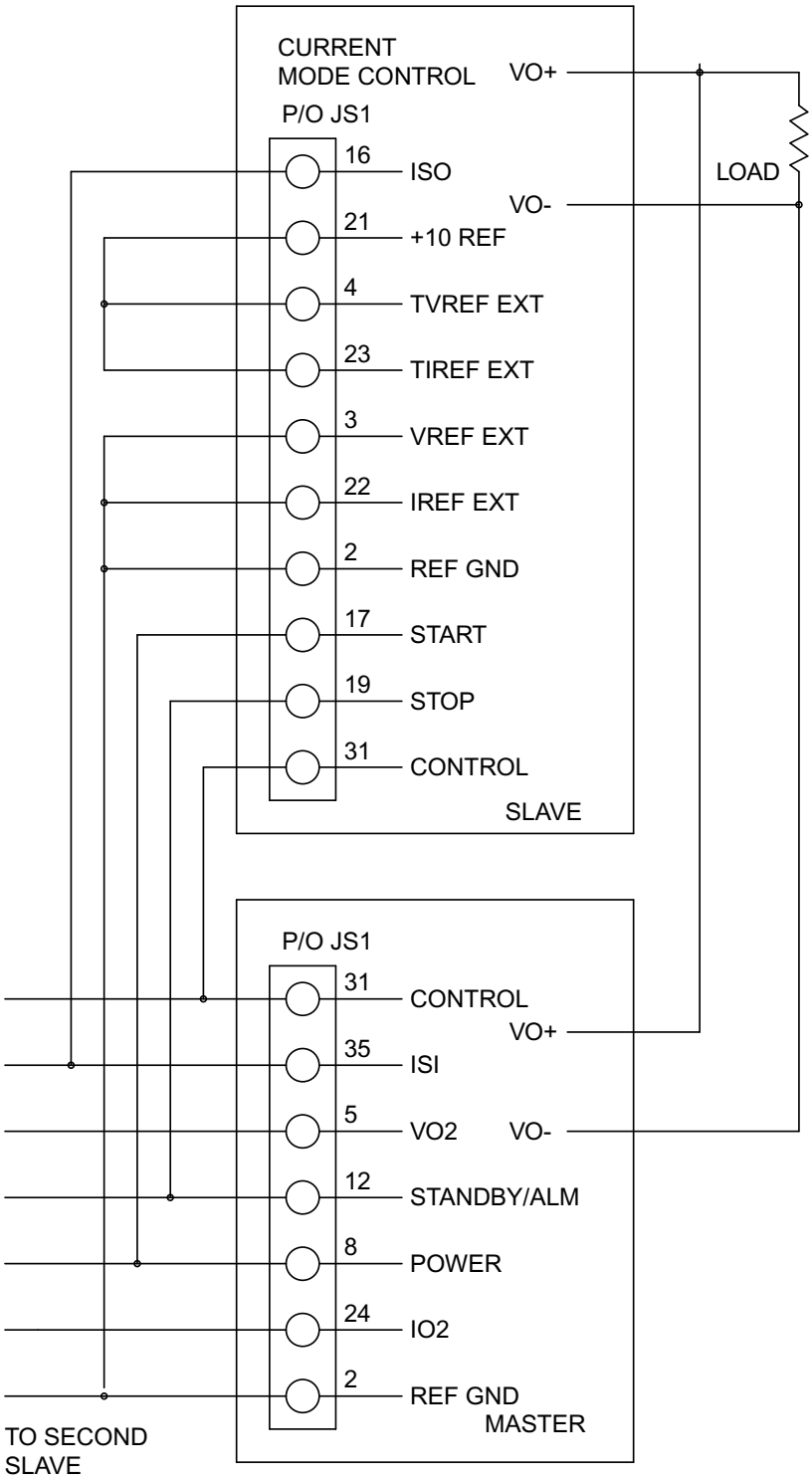

Fig. 7.1: Master-slave parallel DC output and JS1 37-pin external user I/O connections

on the slave power supplies. This makes the slave power supplies operate at the same voltage output as the master power supply.

- Jumper connection between POWER (Pin 8) of the master power supply to START (Pin 17) of the slave power supplies connects the power output digital control line of the master power supply to the start digital control line of the slave power supplies. This connection causes slave units to turn on when the master unit is turned on.
- Jumper connection between STANDBY/ALM (Pin 12) of the master power supply and STOP (Pin 19) of the slave power supplies connects the STANDBY/ALM digital control line of the master power supply to the STOP digital control line of the slave power supplies. This connection causes the slaves units to turn off when the master unit is turned off or when a diagnostic condition appears.
- Jumper connections between TVREF EXT (Pin 4), +10V REF (Pin 21), IREF EXT (Pin 22), and TIREF EXT (Pin 23) of the slave power supplies sets the slave current control to maximum and sets the voltage trip and over current trip set points just beyond full scale values.

The master unit can be configured for rotary, external program, or remote input. The slave power supply must be configured for external program input.

For more information on setting the slave unit to EXT PGM:

- *Configuring the product for EXT PGM from the front panel*
- *Configuring the product for EXT PGM from computer command*

To add a second slave unit, connect the output terminals of the second slave in series with the other two power supplies. Furthermore, connect a second control cable between the second slave unit and the master unit, or use an additional *Universal Interface Device (UID47)* accessory from the factory.

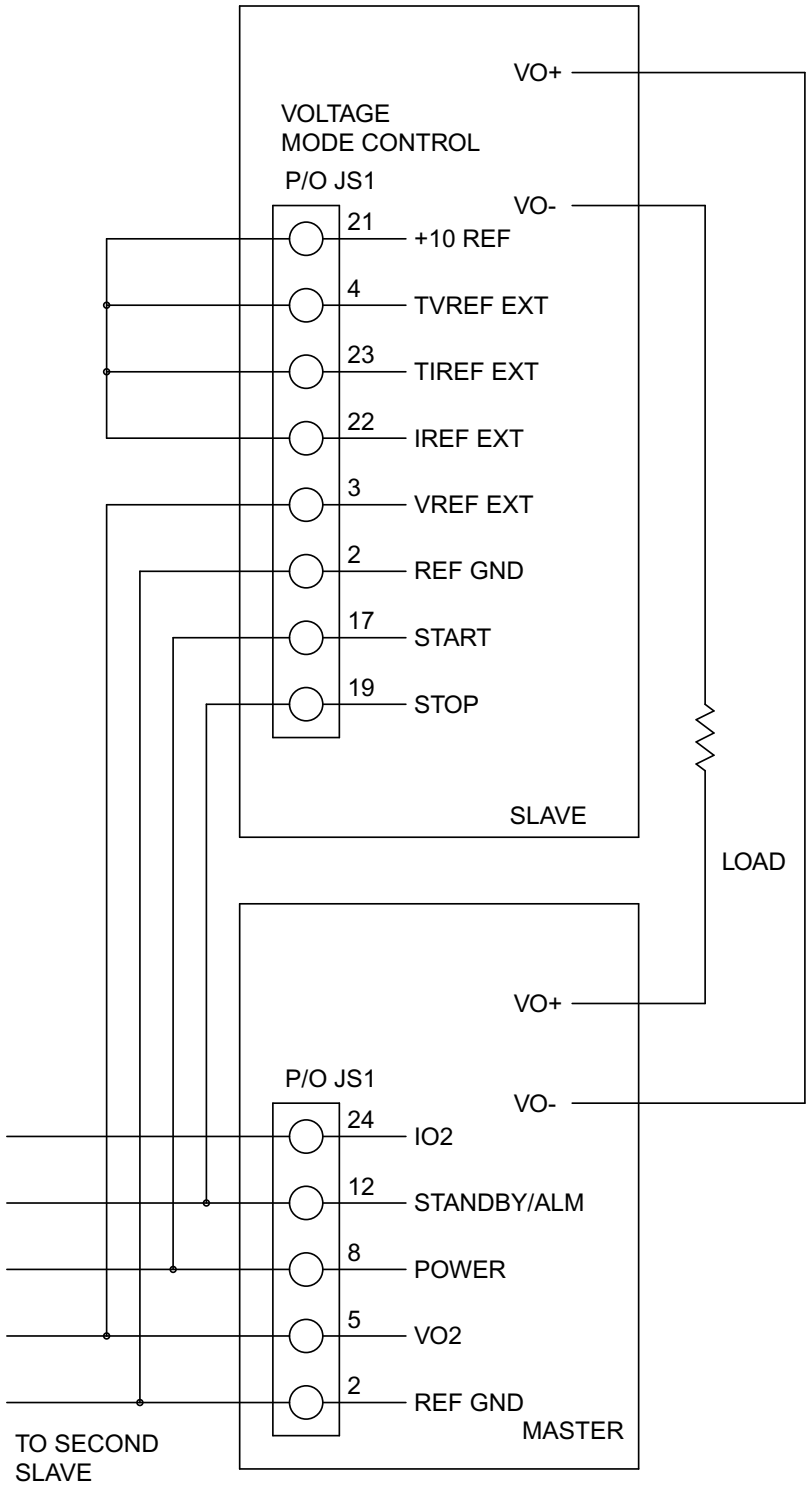

Fig. 7.2: Master-slave series DC output and JS1 37-pin external user I/O connection

CHAPTER

EIGHT

OPERATION: COMPUTER PROGRAMMING

8.1 Introduction

There is a variety of methods and interfaces that can be used to program the SL Series MagnaDC power supply from a computer or programmable logic controller. *Standard Commands for Programmable Instrumentation (SCPI)* are provided for basic ASCII interfacing without any necessary drivers. For more advanced programming requirements, an *IVI-COM driver* is also provided.

SL Series MagnaDC power supply purchased with optional *LXI TCP/IP Ethernet (+LXI)* or *IEEE-488 GPIB (+GPIB) interfaces* have additional commands and programming instructions.

8.1.1 IVI-COM Driver

An IVI-COM driver is included on the provided USB stick and is available for download from the Magna-Power website. The driver allows the MagnaDC power supply to communicate through many different programming languages and software environments, namely: Visual Studio, Visual C++, Visual C#, Visual Basic .NET, LabVIEW, LabWindows/CVI, and MATLAB.

The driver handles the low-level bus protocols, simplifying automation development. It supports TCP/IP, GPIB, and RS232 using standard VISA resource descriptors. For additional documentation and details on using the IVI-COM driver, refer to the driver's included help file (MPEIVI.chm).

8.1.2 Communications Validation

It is important to establish and validate basic communications functions before starting a sophisticated computer interface project. The following instructions are intended to help customers isolate problems with computer settings, wiring, and electrical noise. The validation instructions also provide a common environment for which Magna-Power can reproduce issues in support cases and better serve the customer.

If not already installed, Magna-Power Electronics recommends using the terminal emulation programs called PuTTY for creating serial connections.

These instructions will validate communications over RS232, but the process can be completed over any interface by adjusting the connection settings. To test, make a physical connection between the RS232 connector on the MagnaDC power supply and the RS232 connector on the computer. Pin outs for these connectors are described in *RS232*.

Open *Device Manager* and under ports make note of the COM port number, as shown in Fig. 8.1.

Open *PuTTY* and select the *Session* menu. Enter the COM port that was found in *Device Manger* and enter 19200 for the *Speed*. Set the *Connection type* to *Serial*, as shown in Fig. 8.2.

Select the *Terminal* menu and set *Force on* for all options. Press the *Open* button to start the communications session with the MagnaDC power supply, as shown in Fig. 8.3.

Session should open a new blank window. Type the command:

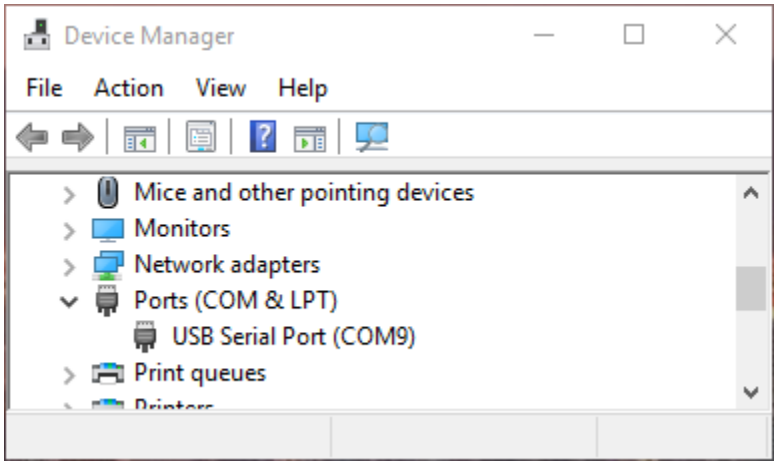

Fig. 8.1: Windows Device Manager

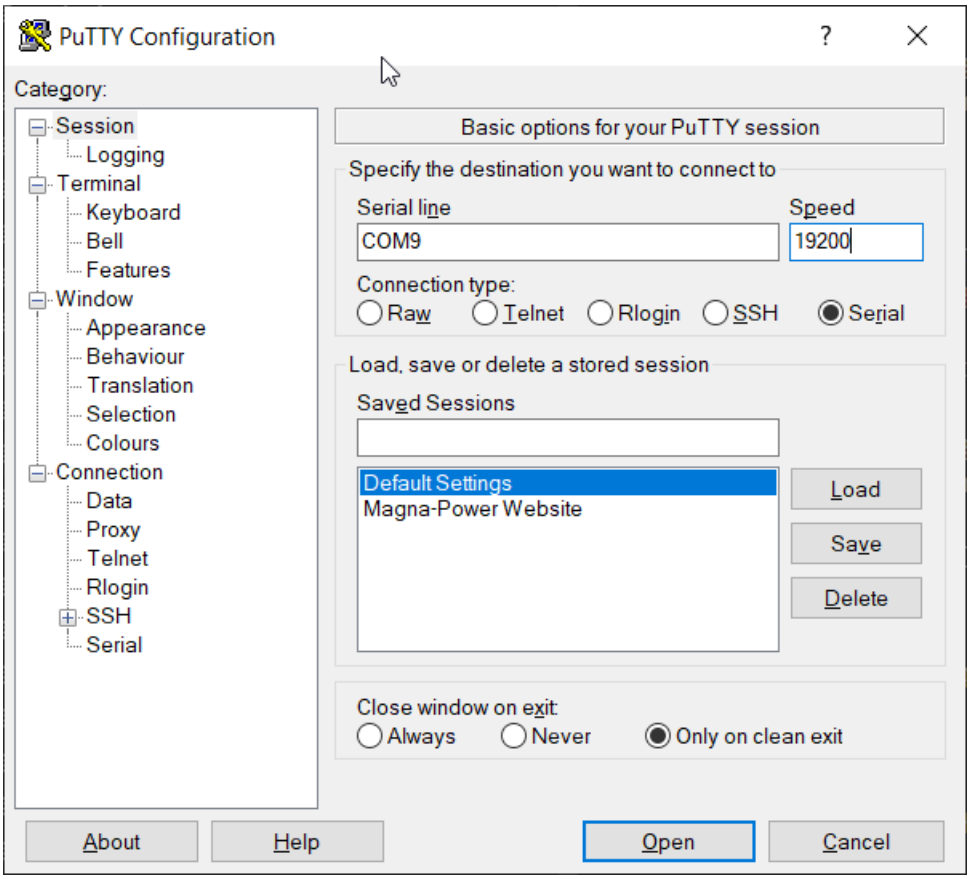

Fig. 8.2: PuTTY Session Settings

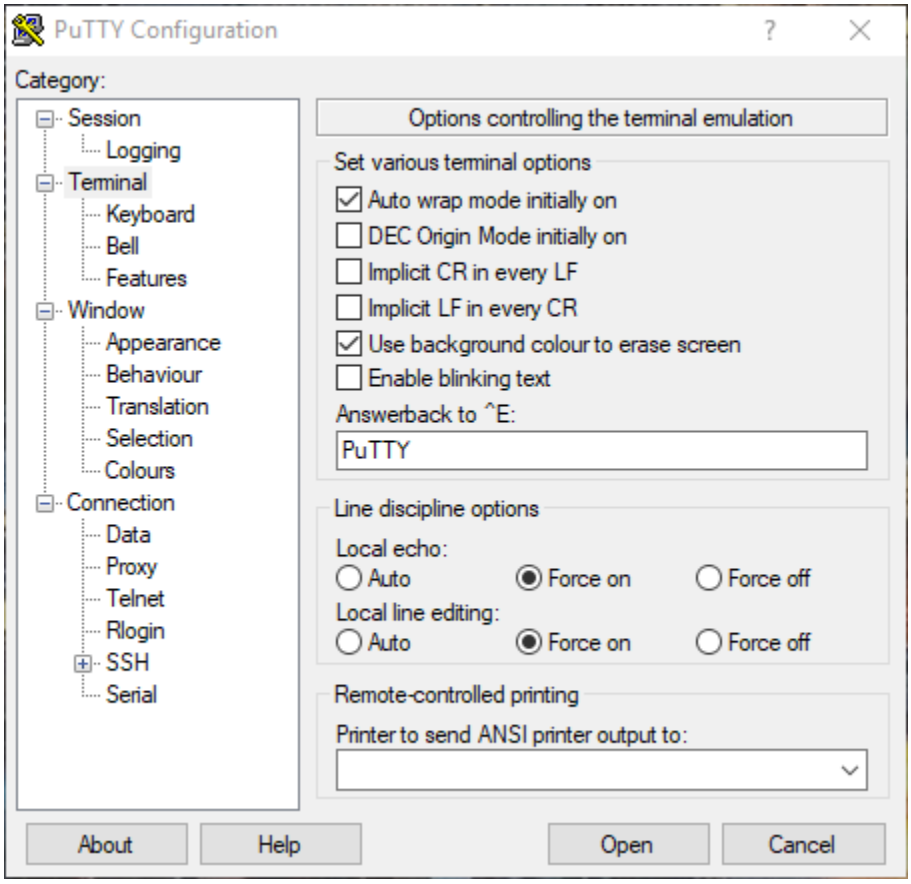

Fig. 8.3: PuTTY Terminal Settings

```
*IDN?
```

If settings match and wiring connections are correct, the session window should look like Fig. 8.4.

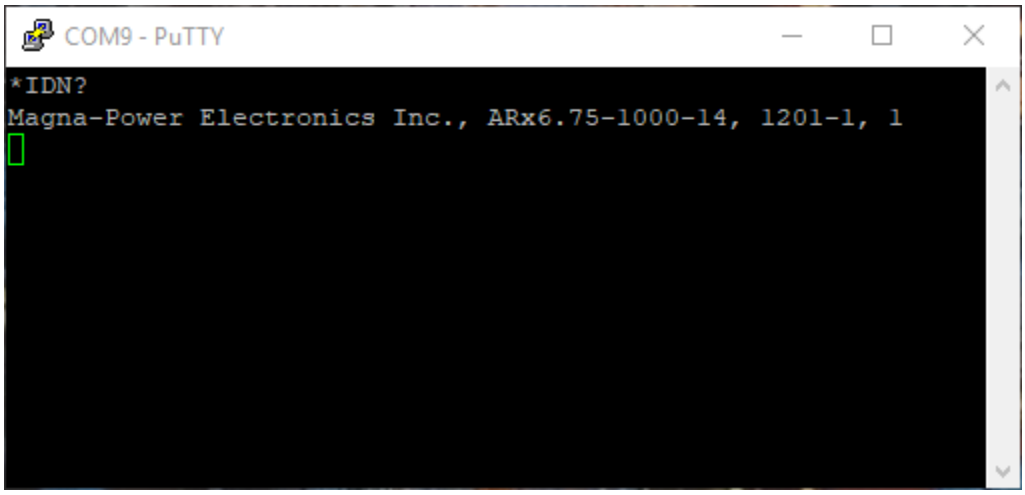

Fig. 8.4: PuTTY Terminal Session Output

8.2 RS232 Communications

One DB-9 female RS232 port comes standard on all SL Series MagnaDC power supply, which provides the simplest means to communicate with the power supply. All the commands detailed in *SCPI Command Set* are supported over RS232. Note that LXI TCP/IP Ethernet and IEEE-488 GPIB specific commands will not be available without the respective option.

The RS232 configuration settings are detailed in the following table:

Table 8.1: RS232 Interface Configuration

Parameter	Value
Baud Rate	19200
Data Size	8-bit
Parity	None
Stop Bits	1
Flow Control	Off
Cable Type	Straight-through

Note

When using external converters that utilize the RS232 port, the settings from Table 8.1 must be used or the product will not communicate.

The RS232 terminal, connector JS3, is detailed in the following table:

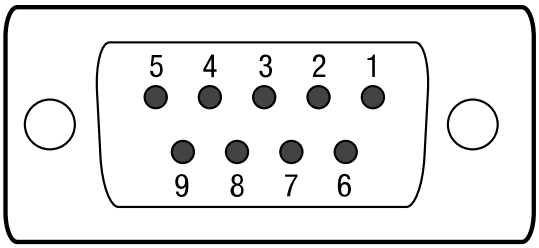

Fig. 8.5: RS232 DB-9 female connector included on the SL Series MagnaDC power supply

Table 8.2: RS232 (JS3) Terminal Definition

Pin	Definition
1	NC
2	RX
3	TX
4	DTP
5	GND
6	DSR
7	RTS
8	CTS
9	NC

8.3 LXI TCP/IP Ethernet Communications

MagnaDC programmable DC power supply products are available with an optional LXI TCP/IP Ethernet interface (+LXI). The LXI TCP/IP Ethernet interface meets the LXI Class C, Revision 1.4 standard. When specified at time of order, an Ethernet interface module is installed, providing an embedded Ethernet port for communications.

Ethernet connections can be made Magna-Power supplied software interface application, terminal emulation programs like PuTTY, user written software, National Instruments LabVIEW™ and a wide variety of other software programming interfaces.

8.3.1 Address Negotiation

By default, DHCP is enabled on the MagnaDC power supply. If the Ethernet board does not discover a DHCP server, the MagnaDC power supply will default to the Auto-IP configuration as defined in Table 8.3. The device then automatically selects an IP address from 169.254.###.### and subnet as described in RFC 3927 (Request for Comments 3927 - Dynamic Configuration of IPv4 Link-Local Addresses). This routine is used by most computer operating systems.

Table 8.3: Default LXI TCP/IP Ethernet Setting (without DHCP server)

IP Address	169.254.###.###
Subnet Mask	255.255.0.0
Default Gateway	0.0.0.0
DNS Server	0.0.0.0
MAC Address	01:1E:6F:##:##:##
Username	admin
Password	*leave blank*

The LAN Reset button provides a way to reset the LAN configuration password and to set the device back to DHCP/Auto-IP mode. To activate the LAN Reset function, ensure the power supply is on and in standby mode. Hold down the LAN Reset button for approximately 4 seconds. Observe that the LAN LED rapidly flashes and after 4 seconds,

release the LAN Reset button. The LAN configuration password will be reset to blank and the module will be set to DHCP/Auto-IP enabled.

The MAC address consists of two number groups, in format: ##:##:##:##:##:##. For Magna-Power Electronics products, the first three bytes are always 01:1E:6F. The second three bytes are determined by the the LXI TCP/IP Ethernet interface's serial number, converted to hex. This serial number can be queried from the power supply using the SCPI command `SYSTem:COMMunicate:NETwork:SERial`.

The LXI TCP/IP Ethernet module supports the mDNS discovery protocol allowing the device to be discovered on the network by software such as National Instruments Measurement and Automation Explorer, Agilent Connection Expert, or the Remote Interface Software supplied with the power supply.

8.3.2 Connectivity

The LAN status LED, located at the rear of the MagnaDC power supply, provides LAN fault and device identification, defined as follows:

On - Normal Operation
The device has a properly configured IP address and the network cable is connected.

Flashing - Device Identify
The LXI Device Identification function was enabled via the Instrument Identification web page. This identification can help the user to quickly locate the unit and distinguish it from similar devices.

Off - LAN Fault
The device is experiencing one or more of the following LAN fault conditions: failure to acquire a valid IP address, detection of a duplicate IP address on the network, failure to renew an already acquired DHCP lease, or the LAN cable is disconnected.

8.3.3 Network discovery

The Ethernet module supports the mDNS discovery protocol allowing the device to be discovered on the network by software such as National Instruments' Measurement and Automation Explorer, Agilent Connection Expert, or the Remote Interface Software (RIS Panel) supplied with the MagnaDC power supply.

NI Measurement and Automation Explorer

To access discovery with NI Measurement and Automation Explorer, the NI-VISA add-on module must be installed along with the standard software package. Start NI Measurement and Automation Explorer, right-click on Devices and Interfaces, and then select "Create New…" Select "VISA TCP/IP Resource" from the list. Click Next and then select Auto-detect of LAN Instrument. Click Next and the software will scan the local network for VXI devices and display them for configuration for further usage with NI-VISA and related software.

Agilent Connection Expert

To access discovery with Agilent Connection Expert, start Agilent Connection Expert. Select your computer's LAN interface and then click the Add Instrument button at the top of the screen. The software will scan the local network for VXI devices and display them for configuration for further use with Agilent VISA compatible software.

Web Browser

The LXI TCP/IP Ethernet interface has an embedded web server that allows the user to view and change the module's network settings. Magna-Power Electronics LXI TCP/IP Ethernet interface is LXI Class C compliant under LXI Standard Revision 1.4.

To access the web server, first determine the module's IP address as described in the *RIS Panel*. Alternatively, if the host computer supports NetBIOS over TCP/IP, you may use the device's NetBIOS name instead of the IP address.

Open a W3C compliant web browser such as Google Chrome, Edge (Chromium), or Mozilla Firefox to http:// [ipaddress]/ or http://{[}hostname{]}/. The instrument information screen will be displayed as shown in *Web interface information panel*. This figure provides the basic information about the configuration and allows the user to enable or disable the LXI Identification. Click Enable Identify or Disable Identify to change the state of the LXI Identification. When LXI Identification is enabled, the LAN LED on the back of the MagnaDC power supply unit will blink. This can help the user to quickly locate the MagnaDC power supply and distinguish it from similar devices.

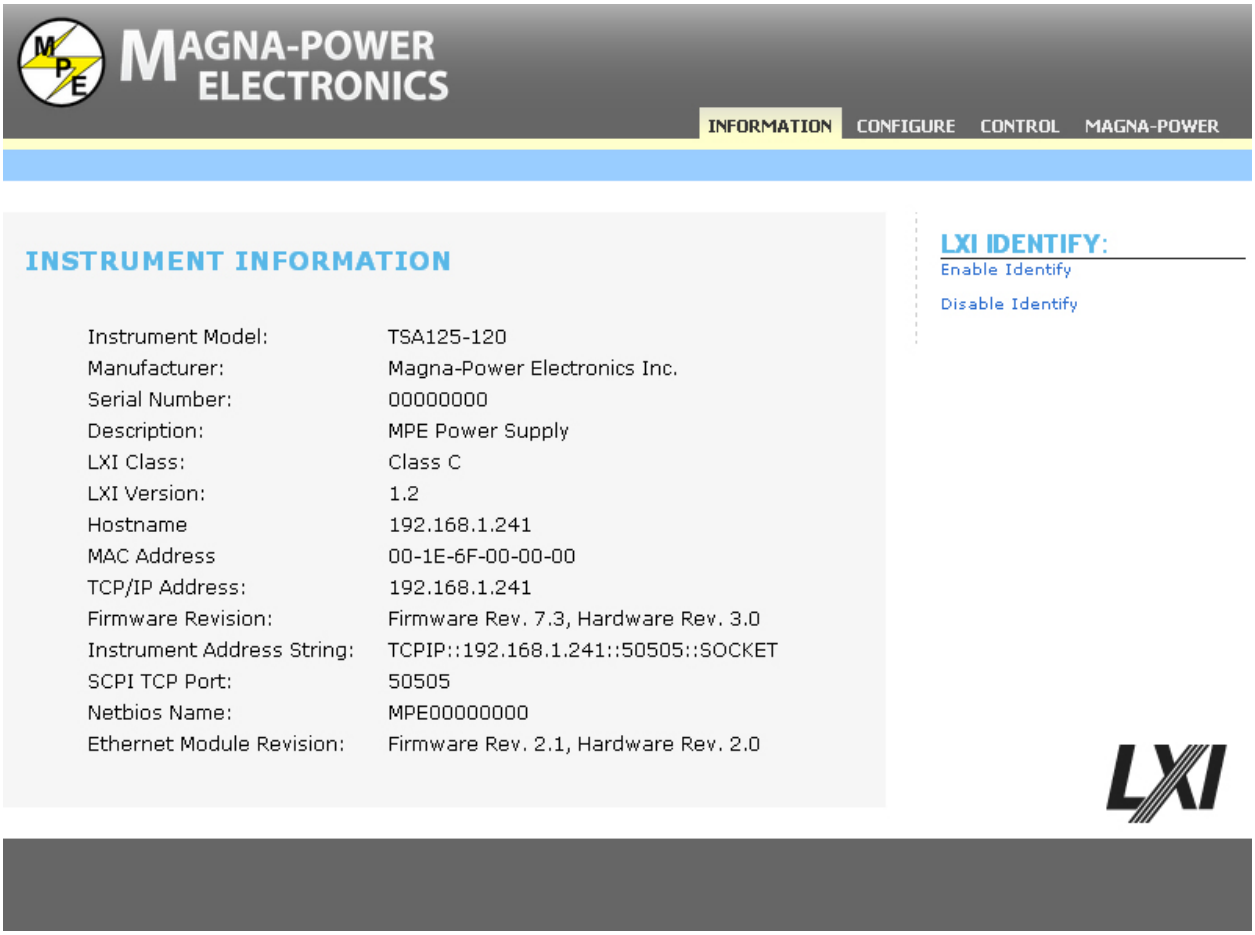

Fig. 8.6: Web interface information panel

To change the Ethernet interface's network settings, click the Configure tab in the upper right. The browser will prompt for a username and password if you have not authenticated the device already. To authenticate, enter admin for the username and leave the password field blank. The instrument configuration screen, *Web interface configuration panel*, will appear. This page enables the user to change the Hostname (which corresponds to the NetBIOS name), the description, password, and TCP/IP configuration. After changes to the configuration are made, click the Save Config button. The configuration will be saved, the Ethernet interface will reboot and instructions will be displayed for reconnecting to the interface.

The browser may prompt for a username and password if you have not authenticated the device already. To authenticate, enter admin for the username and leave the password field blank.

8.4 RIS Panel

This section describes application and configuration of the Remote Interface Software which is shipped with SL Series MagnaDC power supply. This software provides the user with a quick method to operate a MagnaDC power supply under

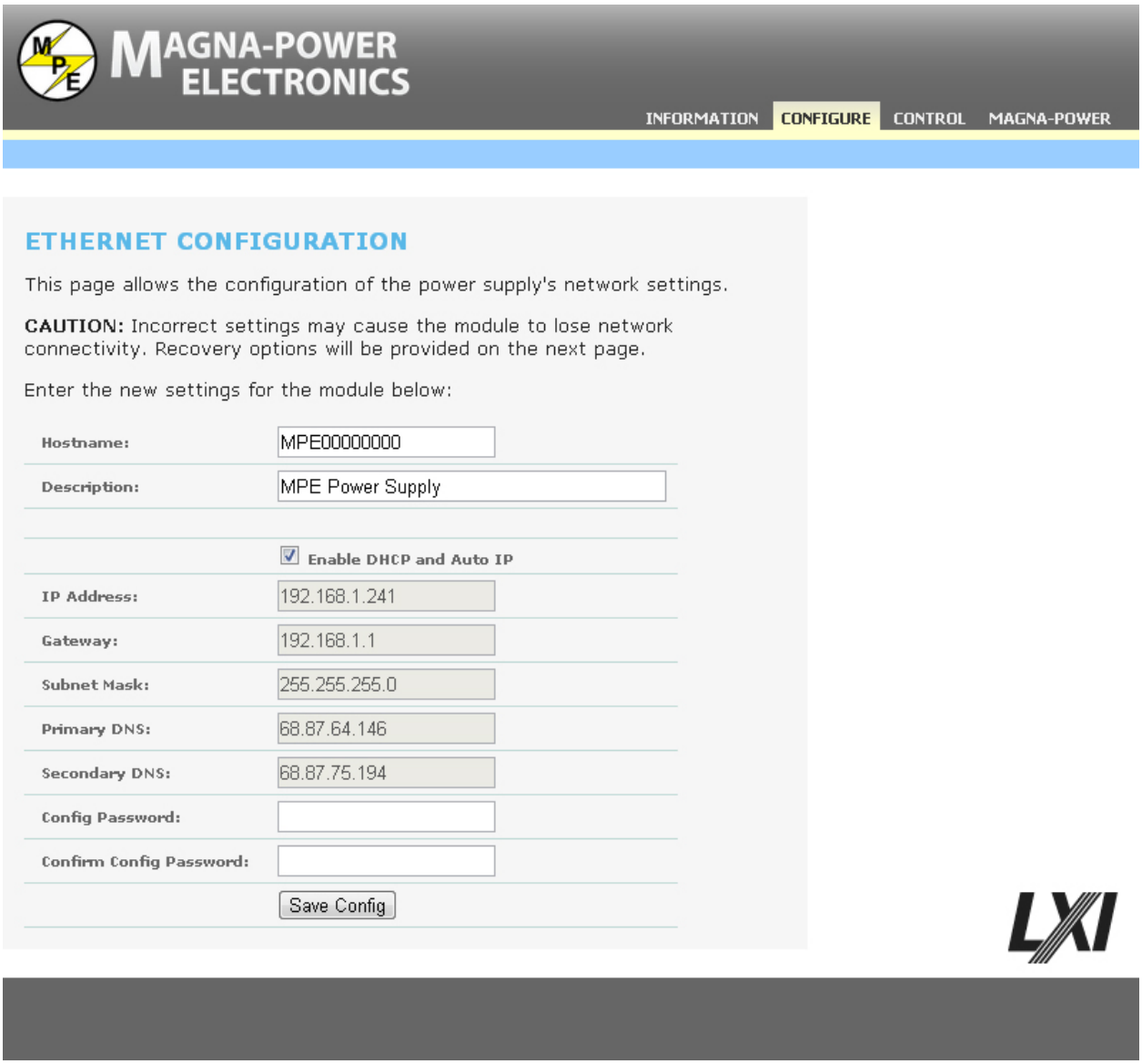

Fig. 8.7: Web interface configuration panel

computer control. The software can be configured for a number of communication interfaces; Ethernet is included as one of these interfaces.

To use the Remote Interface Software with optional Ethernet communications, the address parameters in the Remote Interface Software and that encoded in the MagnaDC power supply must match. The factory default for DHCP is 1 (on) allowing the IP address to be automatically set by the DHCP server on the network. If DHCP is off and the address is unknown, the device can be located using the Remote Interface Software supplied with the MagnaDC power supply. To access discovery, press Find Device in the Communication Setup menu. The routine scans all the devices on the network and provides their addresses and identifications. Select the desired device and press OK; this automatically changes the address in the Communication Setup. The same result can be achieved with a double click on the desired device. After communications is established, the address of the device may be changed by pressing Change Device's Settings.

8.5 IEEE-488 GPIB Communications

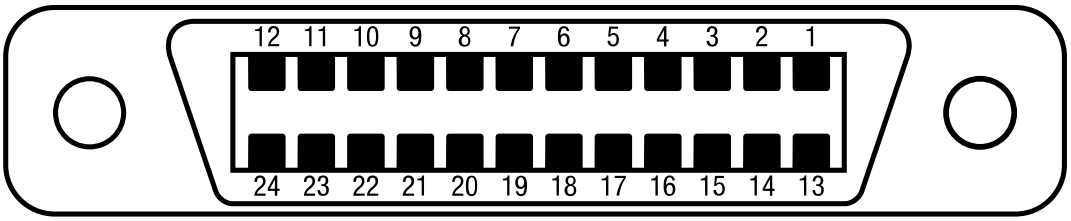

Fig. 8.8: IEEE-488 GPIB connector and pin layout

MagnaDC programmable DC power supply products are available with an optional IEEE-488 GPIB interface. When specified at time of order, an IEEE-488 GPIB interface module is installed internally, providing an embedded IEEE-488 GPIB port available for communications. With two UART ports available, RS232 and IEEE-488 GPIB, the one first receiving communications after power on is the port that is activated. Once activated, the other UART port cannot be recognized unless there has been a period of inactivity for 5 minutes. After this period, a new UART port can be recognized by sending communications. The IEEE-488 GPIB terminal, connector JS4, is detailed in Fig. 8.8.

All of the SCPI subsystem commands in the previous section can be initiated using RS232, optional IEEE-488 GPIB (+GPIB), or optional LXI TCP/IP Ethernet (+LXI) communications.

The IEEE-488 standard defines a method for status reporting. The reporting method uses the IEEE-488 Status Byte (STB). Three bits of this byte are defined as:

- Master Status Summary (MSS) Bit
- Event Status Bit (ESB)
- Message Available (MAV) Bit

The **Master Status Summary (MSS)** is an unlatched bit. When the Status Byte Register is read using a Status Byte Register query, bit 6 will be 1 if there are any conditions requiring service.

The STB is masked by the Service Request Enable Register (SRE) to allow the user to mask specific or all events from setting the MSS bit to 1. The MSS bit is obtained by logical OR'ing the bits of the enabled Status Byte Register.

The **Event Status Bit (ESB)** is set when one of the events defined in the *Event Status Register (ESR)* has occurred. Like the STB, the ESR is masked by the Event Status Enable Register (ESE) to allow the user to mask specific or all events from setting the ESB to 1.

The **Message AVailable (MAV)** bit is set to 1 when a message is available in the output buffer.

8.5.1 IEEE-488 GPIB Communications with NI MAX

National Instruments offers Measurement and Automation Explorer (MAX), a Graphical User Interface, as a terminal emulation program for configuring an Interchangeable Virtual Instrument (IVI). MAX is usually installed with one of National Instrument's Application Development Environments such as LabVIEW, Measurement Studio, or with hardware product drivers such as NI-488 and NI-DAQ.

To operate the power supply with MAX, the instrument must first be located for communications. The following steps describe this procedure.

1. Run the MAX application program.
2. In the Configuration window, press the + sign to the left of Devices and Interfaces to view the installed devices.
3. If there is more than one IEEE-488 GPIB device listed, then select the correct GPIB device.
4. Press Scan for Instruments on the menu bar and wait several seconds.
5. At least one instrument should appear under the GPIB controller. If no instruments appear, then refer to *SYSTem:COMMunicate:GPIB:ADDRess* to verify the correct GPIB address setup.
6. On the menu bar, press Communicate with Instrument. The NI-488 Communicator dialog box should appear.
7. In the NI-488 Communicator dialog box, press the Configure EOS button. The Termination Method dialog box should appear.
8. Select the option Send EOI at end of Write. Enter 0 into the EOS byte. Press OK.

Table 8.4: IEEE-488 GPIB pin definitions

Pin	Definition	Pin	Definition
1	DIO1/Data line	13	DIO5/Data line
2	DIO2/Data line	14	DIO6/Data line
3	DIO3/Data line	15	DIO7/Data line
4	DIO4/Data line	16	DIO8/Data line
5	EOI/End or Identify	17	REN/Remote Enable
6	DAV/Data Valid	18	DAV/Gnd
7	NRFD/Not Ready for Data	19	NRFD/Gnd
8	NDAC/Not Data Accepted	20	NDAC/Gnd
9	IFC/Interface Clear	21	IFC/Gnd
10	SRQ/Service Request	22	SRQ/Gnd
11	ATN/Attention	23	ATN/Gnd
12	Shield	24	Gnd

CHAPTER

NINE

CALIBRATION

9.1 Control Board

The control board contains digital potentiometers for fine adjustments of the reference and feedback amplifiers. These potentiometers may be adjusted by using the front panel controls described in *Calibration*. These potentiometers can also be adjusted by using the Calibration Panel of the Remote Interface Software.

9.1.1 Reference Amplifier Calibration

Connect a voltmeter between Pin 6 of JS1 37-pin external user I/O (positive) and Pin 1 of JS1 37-pin external user I/O (negative). With only the control power applied, adjust potentiometer P5 for 2.5006 V.

9.1.2 Voltage Feedback Amplifier Calibration

Place a DC voltmeter across the output terminals of the power supply and place a second DC voltmeter to monitor VO2, the voltage between Pin 5 of JS1 37-pin external user I/O (positive) and Pin 1 of JS1 37-pin external user I/O (negative). Set the load to 50% rated output current at full scale voltage.

With only the control power applied, adjust potentiometer P2 for 0.000 V at VO2. Using the up/down (V/I DIS or TRIP DIS) keys or RS232 remote interface, set the output voltage to 50% full scale output. Turn on the power supply and adjust potentiometer P1 until the output voltage matches the set point voltage. Now set the output voltage to its full scale rating and measure the output voltage. Adjust potentiometer P1 to equally divide the error between the half scale set point and the full scale point.

9.1.3 Current Feedback Amplifier Calibration

Place a DC ammeter in series with the load of the power supply and place a DC voltmeter to monitor IO2, the voltage between Pin 24 of JS1 37-pin external user I/O (positive) and Pin 1 of JS1 37-pin external user I/O (negative). Set the load to 100% rated output current at 90% full scale voltage.

With only the control power applied, adjust potentiometer P4 for 0.000 V at IO2. Using the up/down (V/I DIS or TRIP DIS) keys or RS232 remote interface, set the output current to 50% full scale output. Turn on the power supply and adjust potentiometer P3 until the output current matches the set point current. Now set the output current to its full scale rating and measure the output current. Adjust potentiometer P3 to equally divide the error between the half scale set point and the full scale point.

9.2 Driver Board

The driver board contains two potentiometers which are used to set under voltage and over current protection in the polyphase chopper circuitry. These potentiometers do not normally need adjustment in the field.

9.2.1 Over Current Protection

Over current protection should only be calibrated after consultation with the factory.

> **Caution**
>
> Gross misadjustment of the over current protection can cause chopper and inverter failure.

Place a DC voltmeter between test point TP6 (positive) and test point TP7 (negative) on the driver board. With only the control power applied, adjust potentiometer P1 to 6.00 V.

9.2.2 Under Voltage Protection

Under voltage protection should only be calibrated after consultation with the factory.

> **Caution**
>
> Gross misadjustment of the under voltage protection can cause chopper and inverter failure.

Connect the power supply to an adjustable AC source and connect an AC voltmeter to monitor the voltage applied to the input terminals. Tests can be performed under no load conditions. Set the AC source to the power supply's rated input voltage. Turn on the control power, press the start switch, and adjust the output voltage to 10% full scale output. Decrease the AC source to a value between 75% to 82% of rated voltage. Adjust potentiometer P2 until the output drops to zero; the transition will be abrupt.

Decrease the AC source to a value between 72% to 79% of rated voltage. The main contactor should turn off.

CHAPTER

TEN

SCPI PROGRAMMING

10.1 SCPI Command Set

Standard Commands for Programmable Instrumentation (SCPI) support is provided for all MagnaDC power supply products. These commands provide programming compatibility with other instruments. SCPI commands are ASCII textual strings, which are sent to the instrument over the physical layer, providing support over all communication interfaces. Utilizing these SCPI commands provides the simplest form of programming a MagnaDC power supply product, as they are driver and programming environment independent. Further information about the SCPI standard and conventions are in the section: *SCPI Introduction*. The full list of linked commands are in section: *SCPI Command Reference List*.

10.1.1 SCPI Introduction

Command Structure

There are two types of SCPI messages: program and response.

A *program message* consists of one or more properly formatted SCPI commands sent from the controller to the MagnaDC power supply. The message, which may be sent at any time, requests the MagnaDC power supply to perform some action.

A *response message* consists of data in a specific SCPI format sent from the MagnaDC power supply to the controller. The MagnaDC power supply sends the message only when requested from a program message query.

Data Types

The following datatypes, referenced in the SCPI command descriptions, describe the responses from query SCPI commands:

<NR1>
: Digits with an implied decimal point assumed at the right of the least-significant digit. Example: 273

<NR2>
: Digits with an explicit decimal point. Example: .0273

<NR3>
: Digits with an explicit decimal point and an exponent. Example: 2.73E+2

The following data types, referenced in the SCPI command descriptions, describe the parameters from program SCPI commands:

<Nrf>
: Extended format that includes **<NR1>**, **<NR2>**, and **<NR3>**. Examples: 273, 273., 2.73E2

<Nrf+>
: Expanded decimal format that includes **<NRf>** and MIN MAX. MIN and MAX are the minimum and maximum limit values that are implicit in the range specification for the parameter. Examples: 273, 273., 2.73E2, MAX

<Bool>
Boolean Data. Example: 0 | 1 or ON | OFF

Termination

A new line **<NL>** character must be sent to the MagnaDC power supply to terminate a SCPI command string. The IEEE-488 EOI (End-Or-Identify) message is interpreted as a **<NL>** character and can be used to terminate a command string in place of an <NL>. A carriage return followed by a new line **<CR><NL>** is also accepted. Command string termination will always reset the current SCPI command path to the root level.

Syntax Conventions

Square brackets []
Used to enclose a parameter that is optional when programming the command; that is, the instrument shall process the command to have the same effect whether the option node is omitted by the programmer or not.

Angle brackets <>
Used to enclose mandatory parameters or to indicate a returned parameter. For example, in the CURRent <value> command syntax, the <value> parameter is enclosed in triangle brackets. The brackets are not sent with the command string. You must specify a value for the parameter, for example: `CURRent 125`

Vertical bar |
Used to separate multiple parameter choices for the command string, for example: `[SOURce:]CURRent 0` through MAX | MINimum | MAXimum

10.1.2 SCPI EEPROM Write Behavior

The power supply saves key configuration and set point values, such as voltage and current set points, to its internal non-volatile EEPROM memory. This feature ensures that your essential settings are maintained when the unit is powered cycled.

To maximize the lifespan of the hardware, Firmware Version 9.1 and later includes a protective EEPROM feature. In its default factory configuration, the power supply will only perform an EEPROM write operation if a new command value is different from the value already stored in EEPROM. For example, sending `CURRent 1.5` when the stored current value is already 1.5 will not trigger an EEPROM write. For most applications, this behavior is sufficient to protect the EEPROM from unnecessary wear.

Certain applications, such as automated test sequences involving rapid "microstepping" of voltage or current, can still generate a high volume of unique commands in a short period. This can lead to an excessive number of write cycles that may reduce the EEPROM's operational life.

For these specific scenarios, we strongly recommend using the *SYSTem:EepromLoCK* command to temporarily disable all EEPROM writes while the high-rate of commands is active.

10.1.3 SCPI Command Reference List

The subsystems provide more details on all the supported commands. The following table provides a summary of the available SCPI commands:

SCPI Command	Description
MEASure Subsystem	
MEASure:VOLTage?	Measures and returns the average voltage at the sense location
MEASure:CURRent?	Measures and returns the average current at the sense location
OUTPut Subsystem	
OUTPut?	Provides the output state of the product
OUTPut:ARM	Enables or disables ARM functionality for auto-sequencing

continues on next page

Table 10.1 – continued from previous page

SCPI Command	Description
OUTPut:START	Enables the power processing circuitry in the product to begin producing output
OUTPut:STOP	Disables the power processing circuitry in the product to stop producing output
OUTPut:PROTection:CLEar	Reset soft faults
SOURce Subsystem	
VOLTage and VOLTage:TRIGgered	Sets the voltage set-point
VOLTage:PROTection	Sets the over voltage trip (OVT) set-point
CURRent and CURRent:TRIGgered	Sets the current set-point
CURRent:PROTection	Sets the over current trip (OCT) set-point
PERiod	Sets the time period for present auto-sequencing memory step
RECall:MEMory	Selects a memory location for auto-sequencing
CONFigure Subsystem	
CONTrol:INTernal	Configures the ability start, stop, arm, and clear via the front panel
CONTrol:EXTernal	Configures the ability start, stop, arm, and clear via digital inputs and computer command
REMote:SENSe	Configures the sense location and automated compensation values
INTErlock	Configures the product's interlock functionality
CONFigure:SETPT	Configures from which interface the product receives its set points
SYSTem Subsystem	
SYSTem:VERSion?	Returns hardware revision and firmware version
SYSTem:ERRor?	Returns error type and message
SYSTem:EepromLoCK	Configures the EEPROM writing behavior
SYSTem:COMMunicate:NETwork:MAC?	Returns MAC address
SYSTem:COMMunicate:NETwork:SER	Returns Ethernet module serial number
SYSTem:COMMunicate:NETwork:VERSion?	Returns firmware version of the Ethernet module
SYSTem:COMMunicate:NETwork:ADDRess	Set the static IP address
SYSTem:COMMunicate:NETwork:GATE	Set the Gateway IP address
SYSTem:COMMunicate:NETwork:SUBNet	Set the subnet IP Mask address
SYSTem:COMMunicate:NETwork:PORT	Set the socket number
SYSTem:COMMunicate:NETwork:HOSTname	Return hostname
SYSTem:COMMunicate:NETwork:DHCP	Set DHCP operation mode
SYSTem:COMMunicate:GPIB:VERSion	Returns firmware version of GPIB module
SYSTem:COMMunicate:GPIB:ADDRess	Returns address of GPIB module
STATus Subsystem	
**CLS*	Clear all status registers
**ESE*	Configure Event Status Enable Register
**ESR?*	Read Event Status Register
**IDN?*	Product identification
**OPC*	Operation Complete Bit
STATus:OPERation:CONDition?	Returns the value of the Operation Status register
STATus:QUEStionable:CONDition?	Returns the value of the Questionable Status register
**RST*	Reset to factory default states
**SRE*	Service Request Enable Register
**STB*	Status Byte
CALibration Subsystem	
CALibrate:IDN	Updates the product identification string
CALibrate:PASS	Initiates the calibration sequence
CALibrate:POT	Sets the value for the specified calibration potentiometer
CALibrate:SCALe:VOLTage	Sets the voltage scale factor
CALibrate:SCALe:CURRent	Sets the current scale factor
CALibrate:SCALe:INPut	Sets the full scale external programming inputs
CALibrate:DEFaults	Resets the calibration potentiometers to factory defaults
CALibrate:STOP	Terminates the calibration subsystem
MODulation Subsystem	

continues on next page

Table 10.1 – continued from previous page

SCPI Command	Description
MODulation:TYPE:SELect	Selects the modulation type and table
MODulation:TABLe	Programs the user defined modulation table
MODulation:SAVE	Saves the active modulation table to non-volatile memory
MODulation:TABLe:LOAD	Loads the cached modulation table into the active table
TRIGger Subsystem	
TRIGger	Controls remote triggering of the power supply
INITiate	Enables the trigger system
ABORt	Cancels any trigger actions presently in process

10.2 Restricted Command Set

Full SCPI programming of the SL Series MagnaDC power supply requires the product to be configured for the REMOTE set point source. To allow computer communications to remain possible at all times, a reduced set of SCPI commands and queries remains available while the product is configured for the ROTARY or EXT PGM set point source. The following table defines which commands and queries are available while in the ROTARY or EXT PGM configuration; a • mark indicates the command or query is available.

Table 10.2: Restricted SCPI command set available while in ROTARY or EXT PGM configuration

Command Type	Command	Command Available	Query Available
Calibration	`CAL:IDN`		•
Calibration	`CAL:PASS`		
Calibration	`CAL:POT`		•
Calibration	`CAL:SCAL:VOLT`		•
Calibration	`CAL:SCAL:CURR`		•
Calibration	`CAL:SCAL:INP`		•
Calibration	`CAL:DEF`		
Calibration	`CAL:STOP`		
Configuration	`CONT:INT`	•	•
Configuration	`CONT:EXT`	•	•
Configuration	`REM:SENS`	•	•
Configuration	`INTE`	•	•
Configuration	`CONF:SETPT`	•	•

continues on next page

Table 10.2 – continued from previous page

Command Type	Command	Command Available	Query Available
Measure	`MEAS:VOLT?`		•
Measure	`MEAS:CURR?`		•
Modulation	`MOD:TYPE:SEL`	•	•
Modulation	`MOD:TABL`	•	•
Modulation	`MOD:SAVE`		•
Modulation	`MOD:TABL:LOAD`	•	
Output	`OUTP?`		•
Output	`OUTP:ARM`		
Output	`OUTP:START`	•	
Output	`OUTP:STOP`	•	
Output	`OUTP:PROT:CLE`	•	
Source	`VOLT and VOLT:TRIG`		•
Source	`VOLT:PROT`	•	•
Source	`CURR and CURR:TRIG`		•
Source	`CURR:PROT`	•	•
Status	`STAT:OPER:COND?`		•
Status	`STAT:QUES:COND?`		•
System	`SYST:VERS?`		•
System	`SYST:ERR?`		•
Trigger	`TRIG`		
Trigger	`INIT`		•

continues on next page

Table 10.2 – continued from previous page

Command Type	Command	Command Available	Query Available
Trigger	`ABOR`		
LXI Ethernet TCP/IP	`NET:VERS?`		•
LXI Ethernet TCP/IP	`NET:MAC?`		•
LXI Ethernet TCP/IP	`NET:SER?`		•
LXI Ethernet TCP/IP	`NET:ADDR`	•	•
LXI Ethernet TCP/IP	`NET:GATE`	•	•
LXI Ethernet TCP/IP	`NET:SUBN`	•	•
LXI Ethernet TCP/IP	`NET:PORT`	•	•
LXI Ethernet TCP/IP	`NET:HOST`	•	•
LXI Ethernet TCP/IP	`NET:DHCP`	•	•
IEEE-488 GPIB	`GPIB:VERS?`		•
IEEE-488 GPIB	`GPIB:ADDR`	•	•
IEEE-488 GPIB	`*CLS`	•	
IEEE-488 GPIB	`*ESR?`		•
IEEE-488 GPIB	`*ESE`	•	•
IEEE-488 GPIB	`*STB?`		•
IEEE-488 GPIB	`*SRE?`	•	•
IEEE-488 GPIB	`*IDN?`		•
IEEE-488 GPIB	`*SAV`		
IEEE-488 GPIB	`*RCL`		
IEEE-488 GPIB	`*RST`		

10.3 CALibration Subsystem

10.3.1 CALibrate:IDN

This command updates the power supply's identification string for the power supply model. The `CAL:IDN` string can have up to 100 characters. Before this command can be used, a password must be validated by `CAL:PASS`. Typically, this command is for Magna-Power Electronics use only.

Command Syntax

```
CALibrate:IDN <string>
```

Parameters

Company Name, Power Supply Model, Serial Number

Example

```
CAL:IDN Magna-Power Electronics Inc., <model>, S/N: 1161-5225
```

Query Syntax

```
CAL:IDN?
```

Return Param

<string>

Related Commands

```
*IDN
```

10.3.2 CALibrate:PASS

This command protects against system calibration corruption and initiates the calibration sequence.

Command Syntax

```
CAL:PASS <NR1>
```

Examples

```
CALIBRATE:PASSWORD 1234,CAL:PASS 1234
```

10.3.3 CALibrate:POT

This command sets the value for the specified potentiometer. The variable specifies the potentiometer to be adjusted, 1 thru 5, and the second variable specifies the potentiometer setting, 0 through 255.

Command Syntax

```
CALibrate:POT <NR1>,<NR2>
```

Examples

```
CALIBRATE:POT 1,123,CAL:POT 5,11
```

Query Syntax

```
CALibrate:POT?
```

Return Param

<NR1>

10.3.4 CALibrate:SCALe:VOLTage

This command sets the voltage scale factor for the power supply.

Command Syntax

```
CALibrate:SCALe:VOLTage <NRf>
```

Examples

`CALIBRATE:SCALE:VOLTAGE 16.0`, `CAL:SCAL:VOLT 16.0`

Query Syntax

`CALibrate:SCALe:VOLTage?`

Return Param

<NR3>

10.3.5 CALibrate:SCALe:CURRent

This command sets the current scale factor for the power supply.

Command Syntax

`CALibrate:SCALe:CURRent <NRf>`

Examples

`CALIBRATE:SCALE:CURRENT 900.0`, `CAL:SCAL:CURR 900.0`

Query Syntax

`CALibrate:SCALe:CURRent?`

Return Param

<NR3>

10.3.6 CALibrate:SCALe:INPut

This command sets the full scale external programming inputs for voltage, current, over voltage trip, and over current trip. The scaling factor for the programming inputs must match the scaling factor set with hardware on the control board.

Command Syntax

`CALibrate:SCALe:INPut <NRf>`

Examples

`CALIBRATE:SCALE:INPUT 10.0`, `CAL:SCAL:INP 10.0`

Query Syntax

`CALibrate:SCALe:INPut?`

Return Param

<NR3>

10.3.7 CALibrate:DEFaults

This command sets the Calibration potentiometers to the factory defaults.

Command Syntax

`CALibrate:DEFaults`

Examples

`CALibrate:DEFaults`, `CAL:DEF`

10.3.8 CALibrate:STOP

This command terminates the calibration subsystem.

Command Syntax

`CALibrate:STOP`

Examples

`CALibrate:STOP`, `CAL:STOP`

10.4 CONFigure Subsystem

10.4.1 CONTrol:INTernal

This command enables or disables the front panel switches and keys for start, stop, arm, and clear. For more information, see *Commands*.

The query, `CONT:INT?`, returns the status of internal control.

Command Syntax

`[CONFigure]:CONTrol:INTernal <bool>`

Parameters

0 (OFF) | 1 (ON)

Examples

`CONF:CONT:INT ON`, `CONT:INT 0`

Query Syntax

`[CONFigure]:CONTrol:INTernal?`

Return Param

0 (OFF) | 1 (ON)

10.4.2 CONTrol:EXTernal

This command enables or disables the external inputs for start, stop, arm, and clear. For more information, see *Commands*.

The query, `CONT:EXT?`, returns the status of external control.

Command Syntax

`[CONFigure]:CONTrol:EXTernal <bool>`

Parameters

0 (OFF) | 1 (ON)

Examples

`CONF:CONT:EXT ON`, `CONT:EXT 0`

Query Syntax

`[CONFigure]:CONTrol:EXTernal?`

Return Param

0 (OFF) | 1 (ON)

10.4.3 REMote:SENSe

This command sets voltage sensing to remote or local mode. *Remote sensing* improves the degradation of regulation which will occur at the load when the voltage drop in the connecting wires is appreciable. The local sense mode monitors the voltage at the output terminals of the power supply.

The query, `REM:SENS?`, returns the state of the sense lines.

Command Syntax

`[CONFigure]:REMote:SENSe <bool>`

Parameters

0 (OFF) | 1 (ON)

Examples

`CONF:REM:SENS ON`, `REMOTE:SENSE 0`

Query Syntax

`[CONFigure]:REMote:SENSe?`

Return Param

0 (OFF) | 1 (ON)

10.4.4 INTErlock

This command enables or disables the external interlock feature. *Interlock (LOC)* is used for applications where the power supply needs to be disabled under external conditions.

The query, `INTE?`, returns the status of external interlock.

Command Syntax

`[CONFigure]:INTErlock`

Parameters

0 (OFF) | 1 (ON)

Examples

`CONF:INTE ON`, `INTE 0`

Query Syntax

`[CONFigure]:INTErlock?`

Return Param

0 (OFF) | 1 (ON)

10.4.5 CONFigure:SETPT

This command sets the operational mode of the power supply: ROTARY, KEYPAD, EXT PGM, or REMOTE. The operational mode determines from which interface the power supply receives its set points.

> **Note**
>
> KEYPAD configuration is only available on TS Series and MT Series products with the D Version front panel.

The query, `CONF:SETPT?`, returns the operation mode of the power supply.

Command Syntax

`[CONFigure]:SETPT <NR1>`

Parameters

0 (ROTARY) | 1 (KEYPAD) | 2 (EXT PGM) | 3 (REMOTE)

Examples

`CONF:SETPT 0`, `SETPT 0`

Query Syntax

`[CONFigure]:SETPT?`

Return Param

<NR1>

10.5 MEASure Subsystem

10.5.1 MEASure:VOLTage?

This command queries the power supply's measured output voltage. The output voltage measurement provided is the average of a number of samples over a fixed time interval.

Query Syntax
`MEASure:VOLTage[:DC]?`

Examples
`MEAS:VOLT?`, `MEASURE:VOLTAGE:DC?`

Return Param
<NR2>

10.5.2 MEASure:CURRent?

This command queries the power supply's measured output current. The output current measurement provided is the average of a number of samples over a fixed time interval.

Query Syntax
`MEASure:CURRent[:DC]?`

Examples
`MEAS:CURR?`, `MEASURE:CURRENT:DC?`

Return Param
<NR2>

10.6 MODulation Subsystem

The Modulation Subsystem adjusts the output voltage or current according to the voltage measured on the external analog input, MOD Pin 25 of JS1, named VMOD. This signal has an allowed input range 0-10V. Modulation requires the power supply to be configured for Keypad (TS Series and MT Series D Version front panels) or Remote mode. Rotary control mode or external program control mode cannot be used with these commands.

Modulation allows a set point adjustment of voltage or current by another input. The modulation signals can be derived from an external device, such as a thermistor, or from the sampling of the output current or voltage. When used with software containing advanced numerical methods, feeding the output voltage or current to adjust the set point current or voltage allows user defined output profiles. The system, incorporating this feature, introduces another negative feedback path with gain controlled by a user programmed attenuator.

Modulation can be introduced into the control loop either adding a variable to the set point or by multiplying a variable with the set point. Additive functions are useful for introducing series and parallel impedances and multiplier functions are useful for adjusting voltages or currents sources. Table 10.3 describes the four options: control input 1 and 2 for voltage and current control and control type 0 and 1 for multiplier and additive functions.

10.6.1 MODulation:TYPE:SELect

This command is composed of two comma separated, modulation parameters. The first parameter, control input, defines whether the modulation table adjusts output voltage or output current. When the control input is set to 1, VMOD selects the modulation table to adjust output voltage. When control input is set to 2, VMOD selects the modulation table to adjust output current. Setting the control input to the default value of 0, disables the modulation function. Information on programming the lookup table is provided in Table 10.3 .

The second command parameter, control type, defines the expression for modulating output voltage or current. With type set to 0, table data points are used in a multiplying expression. With type set to 1, table data points are used in an addition expression.

The choice of using type 0 or type 1 modulation depends on the application. Only one set point can be modulated at any given time. The query command returns two comma separated parameters, the control input followed by the control type.

Table 10.3: Modulation Subsystem parameters control input

Control Input	Control Type 1	Control Type 2
0 (Default)	Disabled	Disabled
1	$V_o = G_v[V_{ref}$ x Mod(VMOD)]	$V_o = G_v[V_{ref}$ + Mod(VMOD)]
2	$I_o = G_v[I_{ref}$ x Mod(VMOD)]	$I_o = G_v[I_{ref}$ + Mod(VMOD)]

Notes:

1. V_o is the adjusted output voltage as a function of the modulation operator
2. I_o is the adjusted output current as a function of the modulation operator
3. V_{ref} is input voltage set point reference
4. I_{ref} is input current set point reference
5. VMOD is the input modulation set point reference
6. G_v is the system gain as defined by the full scale output voltage, V_{fs} , divided by the maximum input voltage set point reference, $V_{ref,max}$
7. G_i is the system gain as defined by the full scale output current, I_{fs} , divided by the maximum input current set point reference, $I_{ref,max}$

Mod(VMOD), modulation, can be an expression, constant, or other numerical operator. A user friendly method chosen by Magna-Power Electronics is a table based algorithm using piecewise linear approximation. This numerical method allows linear or non-linear modulation to be introduced simply by defining the constants in a table.

Command Syntax

```
MODulation:TYPE:SELect <NR1>[,<NR1>]
```

Examples

```
MOD:TYPE:SEL 1,0,MOD:TYPE:SEL 2,1,MODulation:TYPE:SELect 0
```

Query Syntax

```
MODulation:TYPE:SELect?
```

Return Param

<NR1>, <NR1>

10.6.2 MODulation:TABLe

This command programs the user defined modulation table described in *MODulation:TYPE:SELect*. The feature allows the user to program non-linear output voltage and current profiles to fit their application needs, such as source emulation or output adjustments with respect to an external sensor. Modulation functionality may be used either by issuing SCPI commands as detailed in this section or by entering the values into a table from the RIS Panel software.

The lookup table contains 4 columns and up to 50 rows; it stores an output profile as a function of the analog input voltage applied to terminal 25 of JS1, VMOD. As shown in Table 10.4, the first column stores the table row and the second column sets an analog input VMOD. The third column stores the Mod value associated with VMOD for that table row.

The fourth column of the lookup table, Loc, defines whether the table is stored in an active or temporary location. Certain applications may need to transition between different tables while the power supply is still running. For example,

emulation of solar panel's voltage/current characteristics requires continuous external data acquisition along with quick and smooth table loading . The modulation subsystem provides two storage locations, Loc 0 or 1, to help improve table loading performance. With Loc set to 0, data will be stored to the Active Table, the table which is actively applied to the modulation function. With Loc set to 1, data will be stored to the Cache Table, the table intended to be accessed in the next in the profile. During the power on cycle, modulation tables stored in EEPROM are copied into volatile RAM.

Modulation linearly interpolates between data points to form a piecewise-linear curve. Each column has to have data in an acceptable range. All tables less than 50 rows must be terminated with a VMOD value of 9999. Mod values at and past a row with VMOD of 9999 does not affect modulation.

Table 10.4: Modulation table parameters

Description	Column 1: Row	Column 2: VMOD	Column 3: Mod	Column 4: Loc
Acceptable Range	1 to 50	0.0 to 10.0	-1000.0 to 1000.0	0 to 1

While the table will store any value within the acceptable range, the power supply is limited by its output voltage and current specifications. For example, when using type 1 modulation, `MOD:TYPE:SEL 1,1`, a user can store a Mod value of -1000, but the power supply will only output a voltage down to 0 V. From row 1 to 50, VMOD has to be in ascending order.

Modulation points are read with two comma separated parameters, formatted as: Row, Loc. The query will return four parameters, formatted in the same way as the save table command above.

Command Syntax

```
MOD:TABL <NR1>(<NRF>,<NRF>,<NR1>)
```

Examples

```
MOD:TABL 12(0.13, 1.6, 1),  MODulation:TABLe 20(2.0, 15.002, 0),  MOD:TABL
13(1.5, -1.29, 0),MOD:TABL 14(9999, 0, 1)
```

Query Syntax

```
MOD:TABL? <NR1>,<NR1>
```

Return Param

<NR1>(<NRF>,<NRF>,<NR1>)

10.6.3 MODulation:SAVE

This command copies the Active Table in RAM to a non-volatile, EEPROM memory. The Active Table, which is stored in RAM, loses its data on power down cycles. This command allows this data to be recovered at the power on cycle.

Command Syntax

`MOD:SAVE`, `MODulation:TABLe:SAVE`

Examples

```
MOD:SAVE
```

10.6.4 MODulation:TABLe:LOAD

This command copies all data stored in the Cache Table to the Active Table. The command provides two optional parameters for initiating the activate set points for voltage and current. The command lets users quickly load tables and simultaneous change the power supply's output operating point.

Command Syntax

```
MOD:TABL:LOAD [<NRF>, <NRF>]
```

Examples

`MOD:TABL:LOAD`, `MODulation:TABLe:LOAD`, `MODulation:TABL:LOAD 93.4, 30.3`

10.7 OUTPut Subsystem

10.7.1 OUTPut?

This query returns the output state of the power supply. A 1 indicates the product's power processing circuit is active and processing power, while and a 0 indicates the power supply is in standby or faulted state.

Query Syntax

`OUTPut[:STATe]?`

Examples

`OUTP?`

Return Param

0 | 1

10.7.2 OUTPut:ARM

This command selects between fixed programmed set points and auto sequence mode. Fixed programmed set points energizes the product to voltage and current settings until the product is stopped. Auto sequence mode sequentially steps through the memory states, updating the supply's set points at user defined increments. Each memory location contains the voltage set point, current set point, over voltage trip, over current trip, and period. The period parameter, in milliseconds, specifies the time period for operating at the memory location when auto sequence operation is active. When enabled, the ARM light lights on the front panel.

To initiate a program sequence, select the starting memory location, execute this command, and issue an `OUTP:START` command or use the front panel start switch. The ARM light will blink after the start command. If this process reaches the upper memory limit, memory location 99, the following memory location will revert back to 0 and continue. Auto sequence operation will continue until an `OUTP:STOP` is commanded or a memory location with period set to 0 is encountered.

`ARM?` returns the ARM status of the power supply unit (i.e. whether ARM is enabled or disabled).

> **Note**
>
> The `OUTPut:ARM` command is only available on TS Series and MT Series products with the D Version front panel.

Command Syntax

`OUTP:ARM <bool>`

Parameters

0 (OFF) | 1 (ON)

Examples

`OUTP:ARM OFF`, `OUTP:ARM 1`

Query Syntax

`OUTP:ARM`

Return Param

0 | 1

10.7.3 OUTPut:START

This command closes the power supply's input contactor and initiates either normal or auto sequence mode. Auto sequence mode will be initiated if the ARM option is enabled. Normal mode energizes the power supply with the current parameters for voltage set point, current set point, over voltage trip, and over current trip. Auto sequence mode will sequentially step

through memory locations until the stop is commanded, `OUTP:STOP`, or a terminating condition is reached (see *PERiod* and *OUTPut:STOP*).

Command Syntax

`OUTP:START`

Examples

`OUTP:START`, `OUTPut:START`

10.7.4 OUTPut:STOP

This command opens the power supply's input contactor and disables the power processing circuitry, stopping output and returning the power supply to standby. If an auto sequence is in progress, it is terminated.

Command Syntax

`OUTP:STOP`

Examples

`OUTP:STOP`, `OUTPut:STOP`

10.7.5 OUTPut:PROTection:CLEar

This command clears the alarm latches. There are seven alarm latches, namely: interlock, program line, phase loss, thermal, over voltage trip, over current trip, and fuse. Phase loss is not available on SL Series; fuse is available on TS Series and MT Series only. When a fault is detected, the power supply is rendered to an alarm state. The power supply cannot be restarted until the protection condition is cleared and the latch is reset.

Command Syntax

`OUTPut:PROTection:CLEar`

Examples

`OUTP:PROT:CLE`, `OUTPUT:PROTection:CLEar`

10.8 SOURce Subsystem

10.8.1 VOLTage and VOLTage:TRIGgered

These commands set the power supply's immediate voltage level or the pending triggered voltage level. The immediate level is the voltage programmed for the immediate power supply output. The pending triggered level is a stored voltage value that is transferred to the power supply when a trigger occurs. A pending triggered level is unaffected by subsequent `VOLT` commands and remains in effect until the trigger subsystem receives a trigger or is aborted with an `ABORt` command. In order for `VOLT:TRIG` to be executed, the trigger subsystem must be initiated (see *INITiate*).

`VOLT?` and `VOLT:TRIG?` return presently programmed immediate and triggered voltage levels. If no triggered level is programmed, then the voltage level is returned for both values. The queries `VOLT? MAX` and `VOLT? MIN` return the maximum and minimum programmable immediate voltage levels. The queries `VOLT:TRIG? MAX` and `VOLT:TRIG? MIN` return the maximum and minimum programmable triggered voltage levels.

Command Syntax

```
[SOURce]:VOLTage[:LEVel][:IMMediate][:AMPLitude] <NRf+>,
[SOURce]:VOLTage[:LEVel]:TRIGgered[:AMPLitude] <NRf+>
```

Examples

`VOLT 200`, `VOLTAGE:LEVEL 200`, `VOLTAGE:LEVEL:IMMEDIATE:AMPLITUDE 2.5`, `VOLT:TRIG MAX`, `VOLTAGE:LEVEL:TRIGGERED 20`

Query Syntax

```
[SOURce]:VOLTage[:LEVel][:IMMediate][:AMPLitude]?,
```

```
[SOURce]:VOLTage[:LEVel][:IMMediate][:AMPLitude]? MAX,
[SOURce]:VOLTage[:LEVel][:IMMediate][:AMPLitude]?
MIN,                        [SOURce]:VOLTage[:LEVel]:TRIGgered[:AMPLitude]?,
[SOURce]:VOLTage[:LEVel]:TRIGgered[:AMPLitude]? MAX,
[SOURce]:VOLTage[:LEVel]:TRIGgered[:AMPLitude]? MIN
```

Return Param

<NR2>

10.8.2 VOLTage:PROTection

This command sets the *over voltage trip (OVT)* level of the power supply. If the output voltage exceeds the OVT level, then the power supply output is disabled and the Questionable Condition status register OV bit is set (see Table 10.6). An over voltage trip condition can be cleared with the `OUTP:PROT:CLE` command after the condition that caused the OVT trip is removed.

The query `VOLT:PROT?` returns presently programmed OVT level. The queries `VOLT:PROT? MAX` and `VOLT:PROT? MIN` return the maximum and minimum programmable OVT levels.

Command Syntax

```
[SOURce]:VOLTage:PROTection[:LEVel] <NRf+>
```

Examples

`VOLT:PROT 21.5`, `` VOLTAGE:PROTECTION:LEVEL 145E-1``

Query Syntax

```
[SOURce]:VOLTage:PROTection[:LEVel]?, [SOURce]:VOLTage:PROTection[:LEVel]?
MIN, [SOURce]:VOLTage:PROTection[:LEVel]? MAX
```

Return Param

<NR2>

10.8.3 CURRent and CURRent:TRIGgered

These commands set the immediate current level or the pending triggered current level of the power supply. The immediate level is the current programmed for the power supply output. The pending triggered level is a stored current value that is transferred to the power supply output when a trigger occurs. A pending triggered level is unaffected by subsequent `CURR` commands and remains in effect until the trigger subsystem receives a trigger or is aborted with an `ABORt` command. In order for `CURR:TRIG` to be executed, the trigger subsystem must be initiated (see *INITiate*).

`CURR?` and `CURR:TRIG?` return the presently programmed immediate and triggered levels. If no triggered level is programmed, then the `CURR` level is returned for both values. The queries `CURR? MAX` and `CURR? MIN` return the maximum and minimum programmable immediate current levels. The queries `CURR:TRIG? MAX` and `CURR:TRIG? MIN` return the maximum and minimum programmable triggered current levels.

Command Syntax

```
[SOURce]:CURRent[:LEVel][:IMMediate][:AMPLitude] <NRf+>,
[SOURce]:CURRent[:LEVel]:TRIGgered [:AMPLitude] <NRf+>
```

Examples

`CURR 200`, `CURRENT:LEVEL MIN`, `CURRENT:LEVEL:IMMEDIATE:AMPLITUDE 2.5`, `CURR:TRIG 20`, `CURRENT:LEVEL:TRIGGERED 20`

Query Syntax

```
[SOURce]:CURRent[:LEVel][:IMMediate][:AMPLitude]?,
[SOURce]:CURRent[:LEVel][:IMMediate][:AMPLitude]? MAX,
[SOURce]:CURRent[:LEVel][:IMMediate][:AMPLitude]?
MIN,                        [SOURce]:CURRent[:LEVel]:TRIGgered[:AMPLitude]?,
```

```
[SOURce]:CURRent[:LEVel]:TRIGgered[:AMPLitude]? MAX,
[SOURce]:CURRent[:LEVel]:TRIGgered[:AMPLitude]? MIN
```

Return Param
<NR2>

10.8.4 CURRent:PROTection

This command sets the *over current trip (OCT)* level of the power supply. If the output current exceeds the OCT level, then the power supply output is disabled and the Questionable Condition status register OC bit is set (see Table 10.6). An over current trip condition can be cleared with the `OUTP:PROT:CLE` command after the condition that caused the OCT trip is removed.

The query `CURR:PROT?` returns presently programmed OCT level. The queries `CURR:PROT? MAX` and `CURR:PROT? MIN` return the maximum and minimum programmable OCT levels.

Command Syntax

```
[SOURce]:CURRent:PROTection[:LEVel] <NRf+>
```

Examples

`CURR:PROT MAX`, `CURRENT:PROTECTION:LEVEL 145E-1`

Query Syntax

```
[SOURce]:CURRent:PROTection[:LEVel]?, [SOURce]:CURRent:PROTection[:LEVel]?
MIN, [SOURce]:CURRent:PROTection[:LEVel]? MAX
```

Return Param
<NR2>

10.8.5 PERiod

This command sets the period of time that the power supply will remain in the state during auto sequence operation. The minimum unit for the period command is 10 msec and the maximum unit is 9997 sec. There are 3 reserved numbers associated with this command, namely: 0, 9998 and 9999. When a 0 is detected in auto sequence operation, the power supply will stop as if a *Stop* command condition occurred. When a 9998 is detected, the following memory location will be zero. When 9999 is detected, the power supply will operate at that memory state indefinitely or until Stop is commanded. The period's duration can be overridden by using the *Start* command to advance the memory to the next state or the Stop command to stop the power supply.

> **Note**
>
> The `PERiod` command is only available on TS Series and MT Series products with the D Version front panel.

Command Syntax

```
[SOURce]:PERiod <NRf+>
```

Examples

`SOUR:PER 200`, `SOURCE:PERIOD 1345`, `SOUR:PER MAX`

Query Syntax

`[SOURCE]:PERiod?`, `[SOURCE]:PERiod? MIN`, `[SOURCE]:PERiod? MAX`

Return Param
<NR1>

10.8.6 Save

This command stores the present state of the power supply at the specified location in memory. Data can be saved in 100 memory locations. The following power supply parameters are stored by *SAV:

- `VOLT[:LEV][:IMM]`
- `CURR[:LEV][:IMM]`
- `VOLT:PROT[:LEV]`
- `CURR:PROT[:LEV]`
- `PER`

> **Note**
>
> The `*SAV` command is only available on TS Series and MT Series products with the D Version front panel.

Command Syntax

```
*SAV <NR1>
```

Parameters

0-99

Examples

```
*SAV 1
```

Query Syntax

None

10.8.7 RECall:MEMory

The recall command sets the current memory location of the power supply. In remote mode, 100 (0-99) memory locations are available for programming. In KEYPAD mode, the 10 (0-9) memory locations are available for programming.

> **Note**
>
> The `RECall:MEMory` command is only available on TS Series and MT Series products with the D Version front panel.

Command Syntax

```
[RECall]:MEMory <NR1>
```

Examples

```
REC:MEM 10,MEM 99
```

Query Syntax

```
RECall:MEMory?
```

Return Param

<NR1>

10.9 STATus Subsystem

Status commands let you determine the condition of the MagnaDC power supply at any time, grouping together multiple feedback parameters into one returned value.

10.9.1 *CLS

This command clears all status register (*ESR*, *STB* and error queue).

Command Syntax

```
*CLS
```

Parameters

None

Examples

```
*CLS
```

Return Param

None

***RST Value**

N/A

10.9.2 *ESE

This command programs the Event Status Enable Register (ESE). The programming determines which events of the *Event Status Register (ESR)* set the Event Status Bit (ESB) of the Status Byte Register (STB). A "1" in the bit position enables the corresponding event. All of the enabled events of the ESE are logically OR'd to cause the ESB of the STB to be set.

Command Syntax

```
*ESE <NR1>
```

Parameters

Register Bit Position

Examples

```
*ESE 255
```

Query Syntax

```
*ESE?
```

Return Param

<NR1>

***RST Value**

N/A

10.9.3 *ESR?

This query reads the Event Status Register (ESR). After reading the ESR, the register is cleared. The bit configuration of the ESR is the same as the Event Status Enable Register (*ESE). The return parameter is weighted as shown in table below.

The Power On Bit (PON) is set every time the MagnaDC power supply is reset. It can be used to detect a power outage or MagnaDC power supply reset.

Command Syntax

```
*ESR?
```

Parameters

None

Examples

```
*ESR?
```

Return Param

<NR1>

***RST Value**
N/A

Event Status Register

Bit	Weight	Abbreviation	Description
0	1	OPC	Operation Complete
1	2	NU	Not Used
2	4	QYE	Query Error
3	8	DDE	Device Dependent Error
4	16	EXE	Execution Error
5	32	CME	Command Error
6	64	NU	Not Used
7	128	PON	Power On Event, 1 after power on

10.9.4 *IDN?

This query requests MagnaDC power supply to identify itself, returning a string composed of four fields separated by commas.

Query Syntax
`*IDN?`

Examples
`*IDN?`

Return Param
Company Name, MagnaDC power supply Model, Serial Number, Firmware Version

Return Example
Magna-Power Electronics Inc., <model>, 1201-0001, 0.029

***RST Value**
N/A

10.9.5 *OPC

Note

This command is only available with the IEEE-488 GPIB (+GPIB) option.

This command clears the operation complete bit found in the event status register (*ESR*). Should be used in application programming when delay exists between sending a SCPI command and the execution of the command. When all commands have completed, the OPC bit gets set back to 1.

Query Syntax
`*OPC?`

Examples
`*OPC`

Return Param
<NR1>

***RST Value**
N/A

10.9.6 *RST

This command resets the various settings and functions in the MagnaDC power supply to their factory default state. This command is commonly used in initialization routines to restore the MagnaDC power supply to a known configuration. Factory default settings for each command are indicated in the description for respective SCPI commands. SCPI commands with *RST Value indicated as *N/A* either are not affected by the *RST or do not have a parameter that can be changed.

Command Syntax

`*RST`

Parameters

None

Examples

`*RST`

***RST Value**

N/A

10.9.7 *SRE

This command sets the Service Request Enable Register (SRE). This register, defined in the table "Service Request Enable Register", determines which bits from the Status Byte Register (see *STB for its bit configuration) are allowed to set the Service Request (RQS) Bit. A 1 in any SRE bit position enables the corresponding Status Byte Register bit. All Status Byte Register enabled bits are then logically OR'd and placed in bit 6 of the Status Byte Register. When *SRE is cleared (by programming it with 0), the power supply cannot generate a service request to the controller.

Command Syntax

`*SRE`

Parameters

Register Bit Position

Examples

`*SRE 20`

Query Syntax

`*SRE?`

Return Param

<NR1>

***RST Value**

N/A

Service Request Enable Register

Bit	Weight	Abbreviation	Description
0	1	NU	Not Used
1	2	NU	Not Used
2	4	NU	Not Used
3	8	QUES	Questionable Status Bit
4	16	MAV	Message Available Bit
5	32	ESB	Event Status Bit
6	64	RQS	Request Service Bit
7	128	NU	Not Used

10.9.8 *STB

This query gets the Status Byte (STB). Registers are cleared only when the signals feeding it are cleared.

Command Syntax

`*STB?`

Parameters

None

Examples

`*STB?`

Return Param

<NR1>

***RST Value**

N/A

10.9.9 STATus:OPERation:CONDition?

This query returns the value of the Operation Register which is a read-only register that holds the real-time (unlatched) condition of the operational status of the power supply. The bit configuration of the Operation Register is shown in Table 10.5.

Query Syntax

`STATus:OPERation:CONDition?`

Examples

`STAT:OPER:COND?`, `STATUS:OPERATION:CONDITION?`

Return Param

<NR1> (Register value)

Table 10.5: Bit configuration of the Operation Register

Bit	Weight	Abbreviation	Description
0	1	ARM	Arm
1	2	SS	Soft Start
2	4	LOCK	Locked
3	8	INT	Internal Control
4	16	EXT	External Control
5	32	WTG	Interface is Waiting for Trigger
6	64	STBY	Standby
7	128	PWR	Power
8	256	CV	Constant Voltage
9	512	RSEN	Remote Sense
10	1024	CC	Constant Current
11	2048	STBY/ALM	Standby or Alarm
12	4096	NU	Not Used

10.9.10 STATus:QUEStionable:CONDition?

This query returns the value of the Questionable Register. The Questionable Register is a readonly register that holds the real-time (unlatched) condition of the questionable status of the power supply. The bit configuration of the Questionable Register is shown in Table 10.6.

Query Syntax

`STATus:QUEStionable:CONDition?`

Examples

`STAT:QUES:COND?`, `STATUS:QUESTIONABLE:CONDITION?`

Return Param

<NR1> (Register value)

Table 10.6: Bit configuration of the Questionable Register

Bit	Weight	Abbreviation	Description
0	1	OV	Over Voltage Tripped
1	2	OC	Over Current Tripped
2	4	PB	Phase Balance Protection Tripped
3	8	PGM	Program Line Protection Tripped
4	16	OT	Over Temperature Protection Tripped
5	32	FUSE	Fuse Protection Tripped
6	64	NU	Not Used
7	128	ALM	Alarm Protection Tripped
8	256	ILOC	Interlock
9	512	REM	Remote
10	1024	NU	Not Used

10.10 SYSTem Subsystem

10.10.1 SYSTem:VERSion?

The `SYST:VERS?` query returns the firmware and hardware version of the power supply. The returned value has the form Firmware Rev. X.X, Hardware Rev. X.X.

Query Syntax

`SYSTem:VERSion?`

Examples

`SYST:VERS?`, `SYSTEM:VERSION?`

Return Param

<Firmware Rev. XX.Y, Hardware Rev. XX.Y>

10.10.2 SYSTem:ERRor?

The `SYST:ERR?` query returns the error messages that have occurred in the system. The format of the return string is an error number followed by corresponding error message string. The errors are stored in a FIFO (first-in, first-out) buffer. As the errors are read, they are removed from the queue. When all errors have been read, the query returns 0, "NO ERROR." If more errors have accumulated than the queue can hold, the last error in the queue will be -350, "Queue Overflow." When system errors occur, the Standard Event Status Register (ESR), records the error groups as defined in Table 10.7. Table 10.8 lists system errors that are associated with SCPI syntax errors and with interface problems.

Query Syntax

`SYSTem:ERRor?`

Examples

`SYST:ERR?`, `SYSTEM:ERROR?`

Return Param

<error number> | <error string>

Table 10.7: Standard Event Status Register Error Bits

Bit	Error Code	Error Type
5	100 through -199	Command
4	200 through -299	Execution
3	300 through -399	Device Dependent
2	400 through -499	Query

Table 10.8: Error Messages

Error	Error String	Error Description
-100	Command error	Generic command error
-102	Syntax error	Unrecognized command or data type
-108	Parameter not allowed	Too many parameters
-222	Data out of range	E.g., outside the range of this device
-350	Queue overflow	Errors lost due to too many errors in queue
-400	Query error	Generic query error

10.10.3 SYSTem:EepromLoCK

Note

The `SYSTem:EepromLoCK` SCPI command was first introduced in Firmware Version 9.1.

The `SYSTem:EepromLoCK` command controls and queries the EEPROM write lock state of the power supply. When the EEPROM is locked, all attempts to write to non-volatile memory are ignored, protecting stored settings and calibration data from modification. However, the system now maintains a RAM history of attempted writes while locked, which affects subsequent read operations.

Query Syntax

`SYSTem:EepromLoCK?`

Command Syntax

`SYSTem:EepromLoCK <NR1>`

Parameters

0 (Unlock EEPROM, allow writes) | 1 (Lock EEPROM, block writes)

Examples

`SYSTem:EepromLoCK?`, `SYSTem:EepromLoCK 1`, `SYSTem:EepromLoCK 0`

Return Param

0 (EEPROM unlocked, writes allowed) | 1 (EEPROM locked, writes blocked)

Notes

- When the EEPROM is locked, all commands and operations that attempt to write to non-volatile memory will be ignored for the physical EEPROM, but the system will keep a RAM history of these attempted writes.
- When locked, subsequent reads will return the most recent value written (from RAM history) if available, otherwise the value from EEPROM.
- When unlocked, reads always return the value from EEPROM (including any changes made by other means).

- This behavior allows the system to appear responsive to setpoint and configuration changes even when EEPROM is locked, which is useful for testing and temporary configuration without affecting non-volatile storage.
- The lock state is volatile and will be reset on power cycle unless otherwise specified.

10.10.4 SYSTem:COMMunicate:NETwork:VERSion?

This query reads the firmware and hardware versions of the Ethernet communications module.

Query Syntax

`[SYSTem][:COMMunicate]:NETwork:VERSion?`

Examples

`SYST:COMM:NET:VERS?`, `NET:VERS?`

Return Param

<Firmware Ver. XX.Y, Hardware Rev. XX.Y>

10.10.5 SYSTem:COMMunicate:NETwork:MAC?

This query returns the MAC address of the Ethernet module. MAC address consist of two number groups: the first three bytes are known as the Organizationally Unique Identifier (OUI), which is distributed by the IEEE, and the last three bytes are the device's unique serial number. The six bytes are separated by hyphens. The MAC address is unique to the instrument and cannot be altered by the user.

Query Syntax

`[SYSTem][:COMMunicate]:NETwork:MAC?`

Examples

`SYST:COMM:NET:MAC?`, `NET:MAC?`

Return Param

<XX-XX-XX-YY-YY-YY>

10.10.6 SYSTem:COMMunicate:NETwork:SER

This query returns the serial number of the Ethernet module. The serial number is an integer ranging from 1 to 16777215 and cannot be altered by the user.

Query Syntax

`[SYSTem][:COMMunicate]:NETwork:SER?`

Examples

`SYST:COMM:NET:SER?`, `NET:SER?`

Return Param

<NR1>

10.10.7 SYSTem:COMMunicate:NETwork:ADDRess

This command sets the static address of the Ethernet module of the MagnaDC power supply. In absence of a DHCP server, the address automatically selects 169.254.###.###

Command Syntax

`[SYSTem][:COMMunicate]:NETwork:ADDRess <string>`

Parameters

IP address is represented with 4 bytes each having a range of 0-255 separated by periods

Examples

`SYSTem:COMM:NET:ADDR 192.168.10.2`, `NET:ADDR 192.168.10.2`

Query Syntax

```
[SYSTem][:COMMunicate]:NETwork:ADDRess?
```

Return Param

<string>

10.10.8 SYSTem:COMMunicate:NETwork:GATE

This command sets the Gateway IP address of the Ethernet module of the MagnaDC power supply. The Gateway IP defaults to 0.0.0.0 in absence of a DHCP server.

Command Syntax

```
[SYSTem][:COMMunicate]:NETwork:GATE <string>
```

Parameters

Gateway IP address is represented with 4 bytes each having a range of 0-255 separated by dots

Examples

```
SYSTem:COMM:NET:GATE 192.168.10.2,NET:GATE 192.168.10.2
```

Query Syntax

```
[SYSTem][:COMMunicate]:NETwork:GATE?
```

Return Param

<string>

10.10.9 SYSTem:COMMunicate:NETwork:SUBNet

This command sets the subnet IP Mask address of the Ethernet module of the MagnaDC power supply. The factory subnet mask setting is 255.255.255.0.

Command Syntax

```
[SYSTem][:COMMunicate]:NETwork:SUBNet <string>
```

Parameters

IP mask address is represented with 4 bytes each having a range of 0-255 separated by periods.

Examples

```
SYSTem:COMM:NET:SUBNet 255.255.255.128,NET: SUBNet 255.255.255.128
```

Query Syntax

```
[SYSTem][:COMMunicate]:NETwork:SUBNet?
```

Return Param

<string>

10.10.10 SYSTem:COMMunicate:NETwork:PORT

This command sets the Socket (Port) of the Ethernet module of the MagnaDC power supply. The factory default port setting is 50505. The factory recommends port values greater than 49151 to avoid conflicts with registered Ethernet port functions.

Command Syntax

```
[SYSTem][:COMMunicate]:NETwork:PORT <NR1>
```

Parameters

16-bit socket number (1 to 65,535)

Examples

```
SYSTem:COMM:NET: PORT 50505,NET: PORT 50505
```

Query Syntax

`[SYSTem][:COMMunicate]:NETwork:PORT?`

Return Param

<NR1>

10.10.11 SYSTem:COMMunicate:NETwork:HOSTname

This query reads the host name of the Ethernet communications module.

Query Syntax

`[SYSTem][:COMMunicate]:NETwork:HOSTname?`

Examples

`SYST:COMM:NET:HOST?, NET:HOST?`

Return Param

<string>

10.10.12 SYSTem:COMMunicate:NETwork:DHCP

This command sets the DHCP operating mode of the Ethernet module. If DHCP is set to 1, the module will allow its IP address to be automatically set by the DHCP server on the network. If DHCP is set to 0, the module uses its static network settings; the factory default IP address is automatically selected from 169.254.###.### with subnet mask 255.255.0.0, as described in RFC 3927.

Command Syntax

`[SYSTem][:COMMunicate]:NETwork:DHCP <NR1>`

Parameters

0 (DHCP Off) | 1 (DHCP On)

Examples

`SYST:COMM:NET:DHCP 0, NET:DHCP 1`

Query Syntax

`[SYSTem][:COMMunicate]:NETwork:DHCP?`

Return Param

<NR1>

10.10.13 SYSTem:COMMunicate:GPIB:VERSion

This query is available only for units with the IEEE-488 GPIB (+GPIB) option installed. This query reads the firmware version of the GPIB communication module.

Query Syntax

`[SYSTem][:COMMunicate]:GPIB:VERSion?`

Examples

`SYST:COMM:GPIB:VERS?, GPIB:VERS?`

Return Param

<Firmware Ver. XX.Y>

10.10.14 SYSTem:COMMunicate:GPIB:ADDRess

This command is available only for units with the IEEE-488 GPIB (+GPIB) option installed. This command sets the address of the GPIB module of the MagnaDC power supply. The address can be 1 to 30 where address 0 is normally assigned to the GPIB Master. The factory default address is 1.

Command Syntax
`[SYSTem][:COMMunicate]:GPIB:ADDRess <NR1>`

Parameters
1 - 30

Examples
`SYST:COMM:GPIB:ADDR 27`, `GPIB:ADDR 27`

Query Syntax
`[SYSTem][:COMMunicate]:GPIB:ADDR?`

Return Param
<NR1>

10.11 TRIGger Subsystem

10.11.1 TRIGger

This command controls remote triggering of the power supply. When the trigger subsystem is enabled, a TRIG command generates a trigger signal. The trigger signal will then initiate a pending level change as specified by `CURR[:LEV]:TRIG` or `VOLT[:LEV]:TRIG`. Afterwards, the Operation Register will be cleared. If `INIT:CONT` is on, the trigger subsystem is immediately reenabled for subsequent triggers. As soon as it is cleared, the WTG bit is again set to 1.

Command Syntax
`TRIGger[IMMediate]`

Examples
`TRIG`, `TRIGGER:IMMEDIATE`

10.11.2 INITiate

This command enables the trigger system. When the initiate command is enabled, a TRIG command allows specified triggering action to occur. If the initiate subsystem is not enabled, all trigger commands are ignored. If `INIT:CONT` is OFF, then `INIT` enables the trigger subsystem only for a single trigger action; `INIT` must then be repeated prior to further trigger commands. If `INIT:CONT` is ON, then the trigger subsystem is continuously enabled.

INIT:CONT? returns the state of the continuous trigger mode.

The following syntaxes are for `INITiate[:IMMediate]`

Command Syntax
`INITiate[:IMMediate]`

Parameters
None

Examples
`INIT`, `INITIATE:IMMEDIATE`

Query Syntax
None

The following syntaxes are for `INITiate[:CONTinuous]`

Command Syntax
`INITiate:CONTinuous <bool>`

Parameters
0 (OFF) | 1 (ON)

Examples

`INIT:CONT 1`, `INITIATE:CONTINUOUS OFF`

Query Syntax

`INIT:CONT?`

Return Param

0 | 1

10.11.3 ABORt

This command cancels any trigger actions presently in process. Any pending trigger levels are reset to their immediate values. `ABORt` also resets the WTG bit in the Operation Register. If initiate continuous is enabled (`INIT:CONT ON`), the trigger subsystem immediately re-initiates itself after ABORt, thereby setting WTG. ABOR is executed at power turn on and upon execution of `*RCL` or `*RST`.

Command Syntax

`ABORt`

Examples

`ABOR`